PRODUCT INFORMATION

AGILA TWIN

2975UAH050P30-11

EAN 4031582413755



Image may differ from the original product

PERFORMANCE

Roll Performance	●●●○○
Movement noise	●●●○○
Attrition	●●●●○
Corrosion resistance	●●●○○

CORE ATTRIBUTES

Product name	Agila twin
Type	Swivel caster with wheel brake
Standard	EN12530 - Devices Castors
Load capacity at 1.8 mph	154.32 lb
Electric conductive	no
Stainless	no
Load capacity Static	308.65 lb
Temperature range (Minimum)	-40 °F
Temperature range (Maximum)	176 °F
Overall height	2.72 in
Overall width	2.09 in
Overall weight	0.64 lb

HOUSING

Housing Material	Steel sheet, medium
Fork shape	Twin wheel housing
Swivel bearing	Two ball races
Offset	0.98 in
Swivel radius	3.05 in
Swivel interference	6.1 in

WHEEL

Body material	Polyamide
Tread material	Polyurethane, injected
Bearing	Plain bearing
Threadguards	With threadguard
Diameter	1.97 in
Tread width	0.75 in
Hardness of tread (D)	40 Shore D

FITTING

Fitting type	Bolt hole
Bolt hole diameter	0.43 in

© Copyright 2026 TENTE International GmbH

AGILA TWIN

2975UAH050P30-11

EAN 4031582413755

BETTER MOBILITY. BETTER LIFE.

Product Drawings

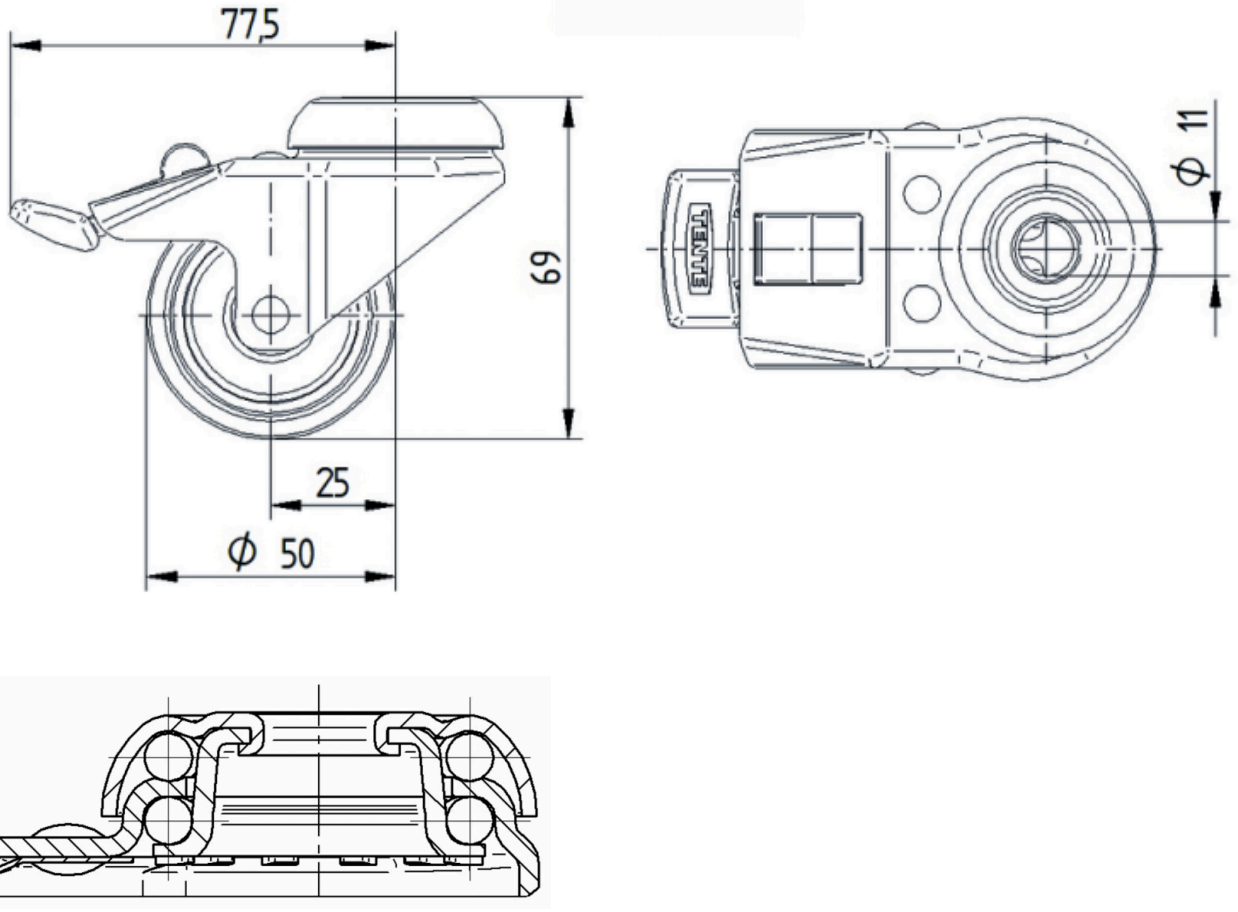

© Copyright 2026 TENTE International GmbH