PRODUCT INFORMATION

LINEA SAFETY

592DUAO075L51-10 RAL9002

EAN 4031582378238

BETTER MOBILITY. BETTER LIFE.

Image may differ from the original product

PERFORMANCE

Roll Performance	●●●○○
Movement Noise	●●●○○
Attrition	●●●○○
Corrosion Resistance	●●●●○

CORE ATTRIBUTES

Product Name	Linea safety
Type	Automatic locking system
Standard	EN12528 - Furniture Castors
Load capacity at 3 km/h	90 kg
Electric Conductive	No
Stainless	No
Load capacity Static	180 kg
Temperature range (Minimum)	-20 °C
Temperature range (Maximum)	60 °C
Overall Height	75.5 mm
Overall width	55 mm
Overall weight	0.16 kg

HOUSING

Housing Material	Polyamide
Fork shape	Twin wheel housing
Swivel Bearing	Stem, swiveling
Housing Color	Grey white (RAL9002)
Offset	23 mm
Swivel radius	66 mm
Swivel interference	132 mm
Dome diameter	30 mm
Hint	Force to release 23 N and spring stroke length 8 mm.

WHEEL

Body material	Polyamide
Tread Material Mix	Polyurethane, injected
Bearing	Plain bearing
Threadguards	Without threadguard
Diameter	75 mm
Tread width	15 mm
Hardness of tread (A)	92 Shore A

FITTING

Fitting type	Blind hole for B10
Bolt hole diameter	10 mm

Deutscher Designer Club

Interzum Award

IF Design Award

© Copyright 2026 TENTE International GmbH

LINEA SAFETY

592DUAO075L51-10 RAL9002

EAN 4031582378238

BETTER MOBILITY. BETTER LIFE.

Product Drawings

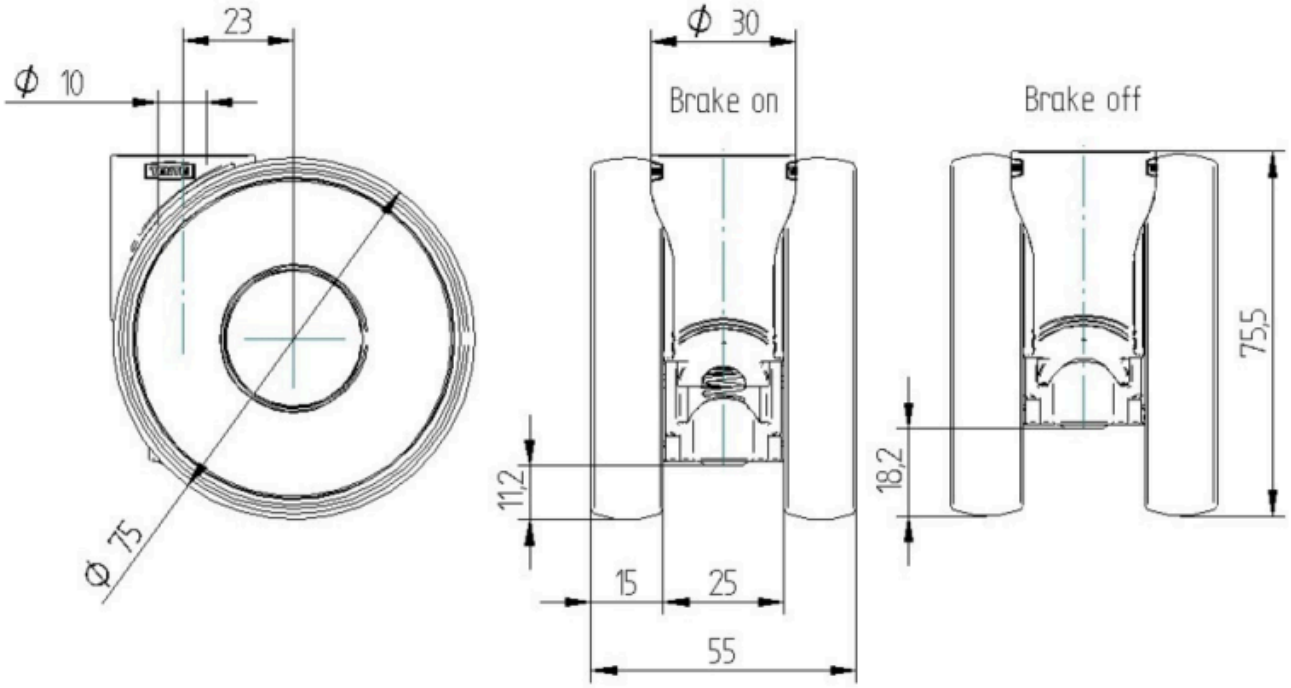

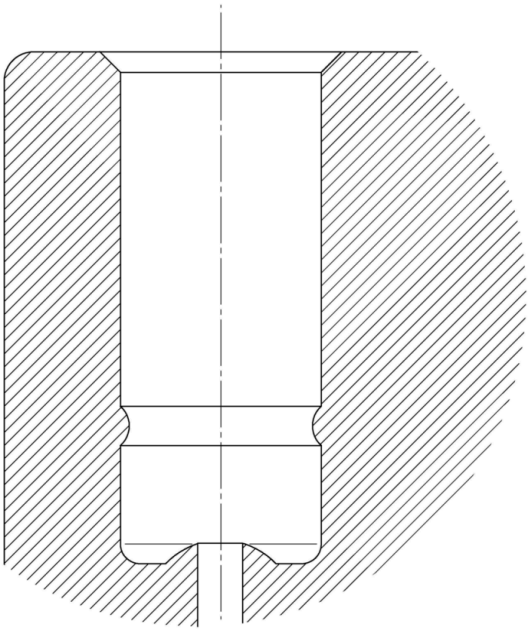

Deutscher Designer Club

Interzum Award

IF Design Award