PRODUCT INFORMATION

SUPRATECH

PJP125x40-Ø 8,3, blue

EAN 4031582444216

BETTER MOBILITY. BETTER LIFE.



Image may differ from the original product

WHEEL

Tread hardness	soft
Body material	Polypropylene
Tread Material Mix	Thermoplastic rubber
Bearing	Precision ball bearing
Threadguards	With threadguard
Diameter	125 mm
Tread width	40 mm
Axle Hole Diameter	8 mm
Hub Length	45 mm
Hardness of tread (A)	65 Shore A

PERFORMANCE

Roll Performance	● ● ● ○ ○
Movement Noise	● ● ● ○ ○
Attrition	● ● ● ○ ○
Corrosion Resistance	● ● ● ○ ○

CORE ATTRIBUTES

Product Name	Supratech
Type	Wheel
Standard	EN12532 - Transport Equipment
Load capacity at 4 km/h	180 kg
Electric Conductive	No
Stainless	No
Load capacity Static	360 kg
Temperature range (Minimum)	-20 °C
Temperature range (Maximum)	60 °C
Overall weight	0.24 kg

© Copyright 2026 TENTE International GmbH

SUPRATECH

PJP125x40-Ø 8,3, blue

EAN 4031582444216

BETTER MOBILITY. BETTER LIFE.

Product Drawings

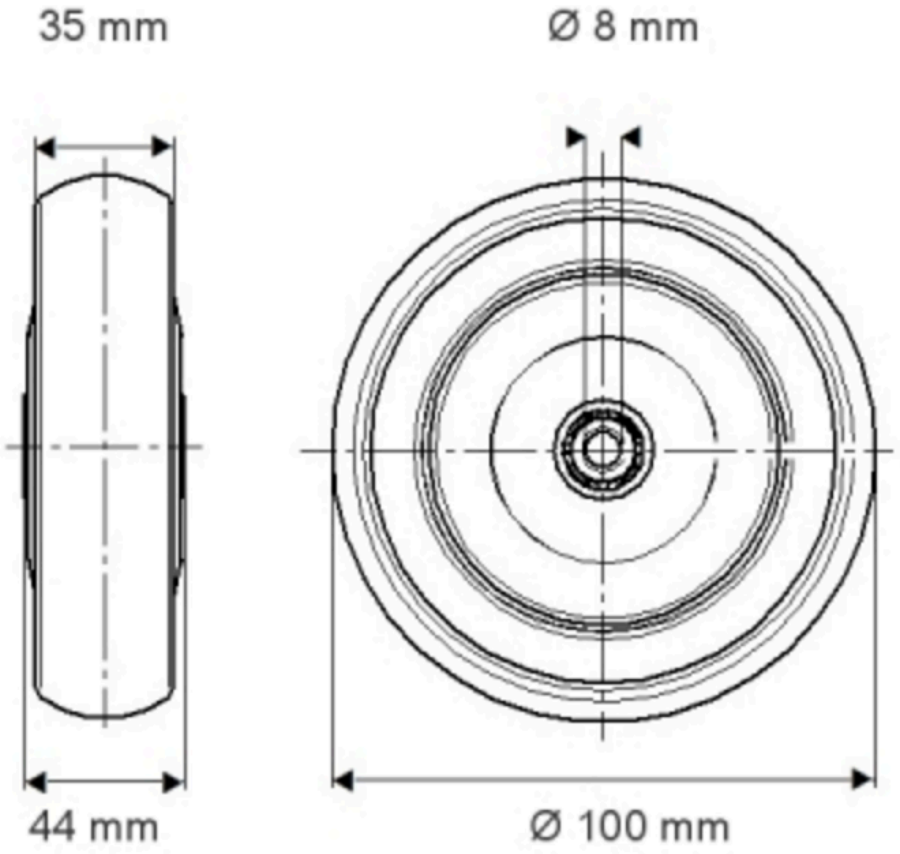

© Copyright 2026 TENTE International GmbH