PRODUCT INFORMATION

LINEA

5940UAP100R05-28 RAL7001

EAN 4031582350722
Order number 00079889

Image may differ from the original product

PERFORMANCE

Roll performance	●●●●●
Movement noise	●●●○○
Attrition	●●●●○
Corrosion resistance	●●●●○

CORE ATTRIBUTES

Product name	Linea
Type	Swivel castor
Standard	EN12530 - Devices Castors
Load capacity at 3 km/h	120 kg
Load capacity Static	240 kg
Temperature range (Minimum)	-10 °C
Temperature range (Maximum)	40 °C
Overall height	120 mm
Overall width	82 mm
Overall weight	0.827 kg

WHEEL

Body material	Polyamide
Tread material	Polyurethane, injected
Bearing	Precision ball bearing
Threadguards	With threadguard
Diameter	100 mm
Tread width	20 mm
Hardness of tread (A)	92 Shore A

HOUSING

Material fork	Polyamide
Fork shape	Twin wheel housing
Swivel bearing	Precision ball bearing
Colour	Silver grey (RAL7001)
Offset	32 mm
Swivel radius	90 mm
Swivel interference	180 mm
Dome diameter	52 mm

FITTING

Fitting type	Solid stem, round
Bolt diameter	28 mm
Bolt length	40 mm

Deutscher Designer Club

Interzum Award

IF Design Award

© Copyright 2026 TENTE International GmbH

LINEA

5940UAP100R05-28 RAL7001

EAN 4031582350722
Order number 00079889

BETTER MOBILITY. BETTER LIFE.

TECHNICAL DRAWINGS

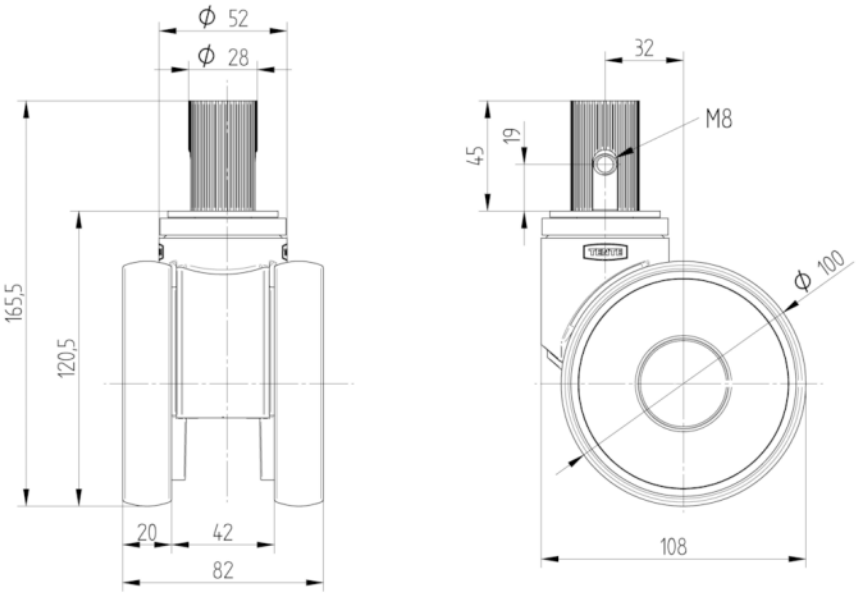

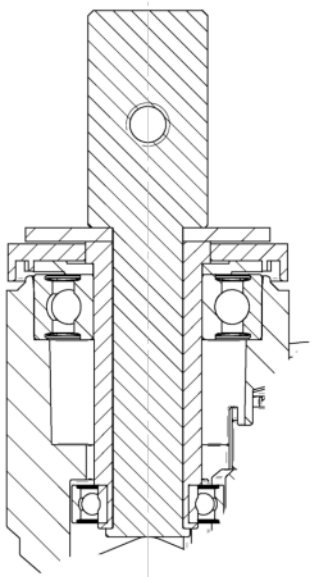

Deutscher Designer Club

Interzum Award

IF Design Award

© Copyright 2026 TENTE International GmbH