PRODUCT INFORMATION

AGILA

2477PJH075P30-11

EAN 4031582323733

BETTER MOBILITY. BETTER LIFE.



Image may differ from the original product

PERFORMANCE

Roll Performance	●●●○○
Movement Noise	●●●●○
Attrition	●●●○○
Corrosion Resistance	●●●○○

CORE ATTRIBUTES

Product Name	Agila
Type	Swivel castor with total lock
Standard	EN12530 - Devices Castors
Load capacity at 3 km/h	75 kg
Electric Conductive	No
Stainless	No
Load capacity Static	150 kg
Temperature range (Minimum)	-20 °C
Temperature range (Maximum)	60 °C
Overall Height	100 mm
Overall width	43 mm
Overall weight	0.28 kg

HOUSING

Housing Material	Steel sheet, medium
Fork shape	Broad
Swivel Bearing	Two ball races
Housing Color	Blue passivated
Offset	24 mm
Swivel radius	80 mm
Swivel interference	160 mm
Dome diameter	43 mm

WHEEL

Body material	Polypropylene
Tread Material Mix	Thermoplastic rubber
Bearing	Plain bearing
Wheel Color	Silver grey (RAL7001)
Threadguards	With threadguard
Diameter	75 mm
Tread width	25 mm
Body width	25 mm
Hardness of tread (A)	87 Shore A

FITTING

Fitting type	Bolt hole
Bolt hole diameter	11 mm
Hint	Castors can be mounted with standard screws of any length.

© Copyright 2026 TENTE International GmbH

AGILA

2477PJH075P30-11

EAN 4031582323733

Order number 00003939

Product Drawings

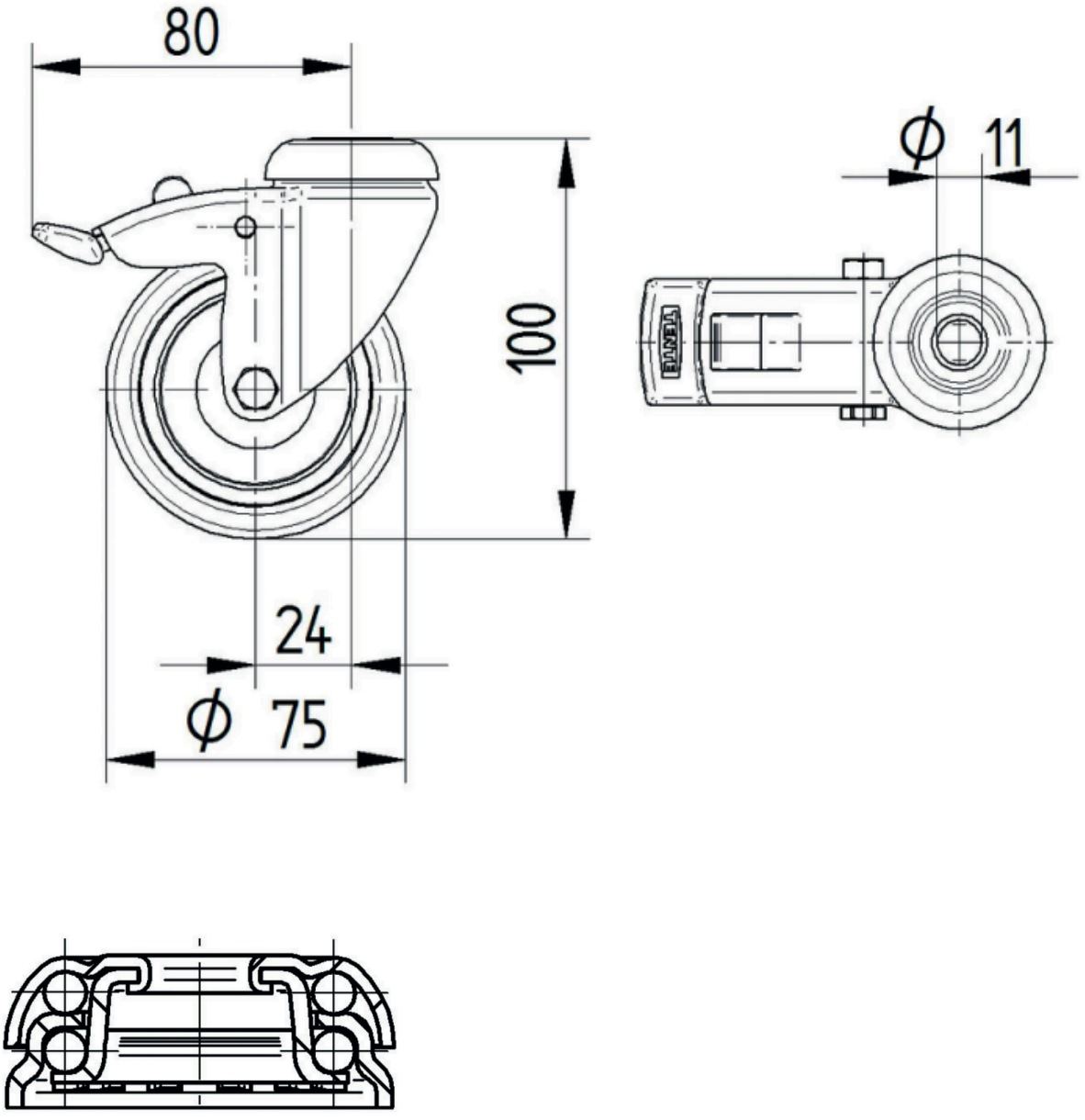

© Copyright 2026 TENTE International GmbH