PRODUCT INFORMATION

INTEGRAL ASSIST

ED44ETW150R36-32S35 D 9002 4xM6 270°

Order number 990066956



Image may differ from the original product

PERFORMANCE

Roll Performance	●●●●●
Movement Noise	●●●●○
Attrition	●●●●○
Corrosion Resistance	●●●●○

CORE ATTRIBUTES

Product Name	Integral assist
Type	Swivel castor with central, total or directional lock
Standard	EN12531 - Hospital Bed Castors
Load capacity at 4 km/h	150 kg
Electric Conductive	No
Stainless	No
WeAssist Compatible	1
Load capacity Static	450 kg
Temperature range (Minimum)	-10 °C
Temperature range (Maximum)	40 °C
Overall Height	183 mm
Overall width	110.5 mm
Overall weight	5.01 kg
Protection type	IPX6 (only for electronic components when installed)
Permissible ambient temperature	Operating temperature 5 °C to 40 °C, air humidity 20% - 80%

HOUSING

Swivel Bearing	Precision ball bearing
Housing Color	Grey white (RAL9002)
Offset	40 mm
Swivel radius	115 mm
Swivel interference	230 mm
Dome diameter	110.5 mm

WHEEL

Body material	Steel, iron
Tread Material Mix	PUR casted premium
Bearing	Hub motor
Tread Color	Slate grey (RAL7015)
Threadguards	Integrated threadguard
Diameter	150 mm
Tread width	50 mm
Hardness of tread (A)	85 Shore A

FITTING

Brake cam	hex cam
Fitting type	Stem with cam hole for profile bars, short version

Red Dot Design Award

© Copyright 2026 TENTE International GmbH

INTEGRAL ASSIST

ED44ETW150R36-32S35 D 9002 4xM6 270°

Order number 990066956

BETTER MOBILITY. BETTER LIFE.

Product Drawings

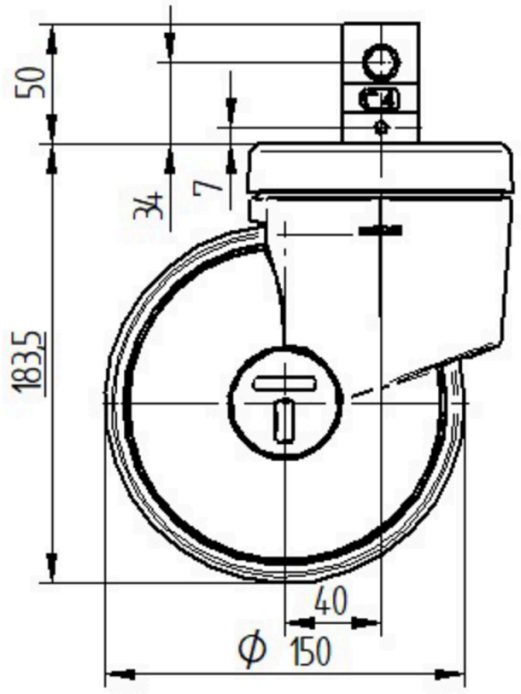

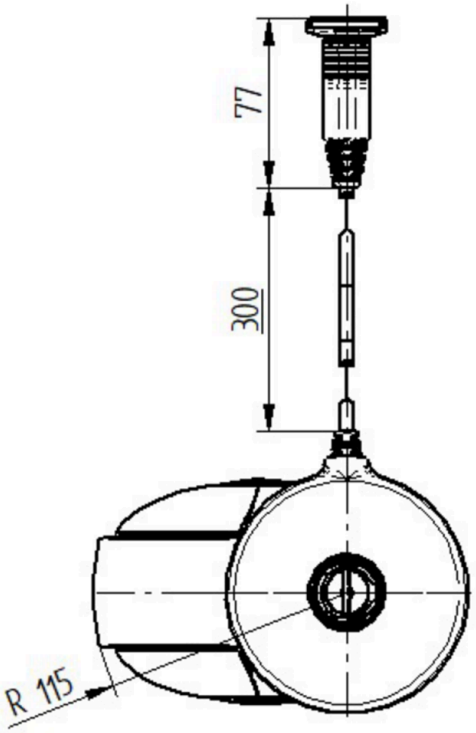

Red Dot Design Award

© Copyright 2026 TENTE International GmbH