PRODUCT INFORMATION

AGILA TWIN

2977PJP075P30-10,3

EAN 4031582302936

BETTER MOBILITY. BETTER LIFE.



Image may differ from the original product

PERFORMANCE

Roll Performance	●●●○○
Movement noise	●●●●○
Attrition	●●●○○
Corrosion resistance	●●●○○

CORE ATTRIBUTES

Product name	Agila twin
Type	Swivel caster with total lock
Standard	EN12530 - Devices Castors
Load capacity at 1.8 mph	220.46 lb
Electric conductive	no
Stainless	no
Load capacity Static	440.92 lb
Temperature range (Minimum)	-4 °F
Temperature range (Maximum)	140 °F
Overall height	3.9 in
Overall width	2.8 in
Overall weight	1.4 lb

HOUSING

Housing Material	Steel sheet, medium
Fork shape	Twin wheel housing
Swivel bearing	Two ball races
Housing Color	Blue passivated
Offset	1.23 in
Swivel radius	3.9 in
Swivel interference	7.8 in
Dome diameter	2.56 in

WHEEL

Body material	Polypropylene
Tread material	Thermoplastic rubber
Bearing	Precision ball bearing
Wheel color	Silver gray (RAL7001)
Threadguards	With threadguard
Diameter	2.95 in
Tread width	0.98 in
Body width	0.98 in
Hardness of tread (A)	87 Shore A

FITTING

Fitting type	Bolt hole
Bolt hole diameter	0.41 in

© Copyright 2026 TENTE International GmbH

AGILA TWIN

2977PJP075P30-10,3

EAN 4031582302936

Order number 00003170

Product Drawings

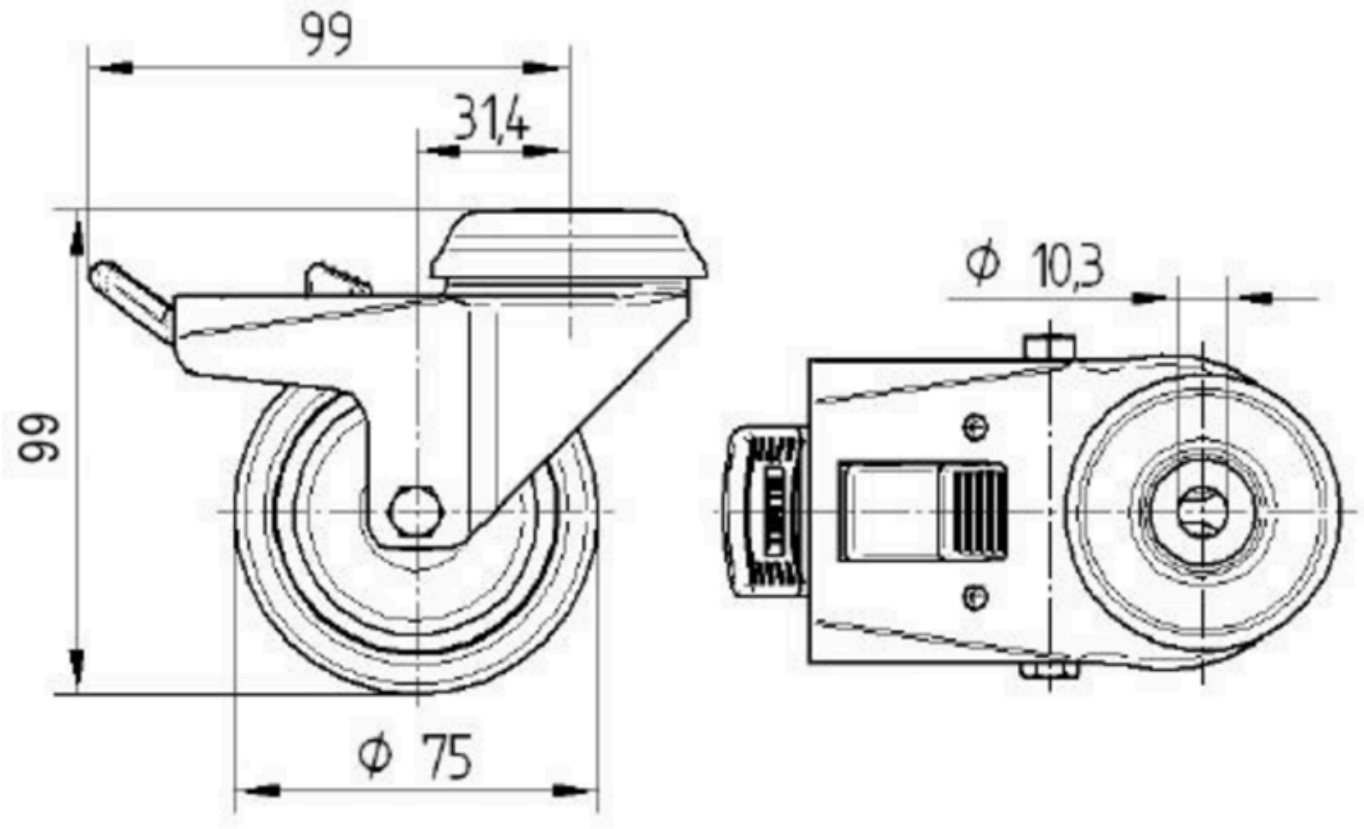

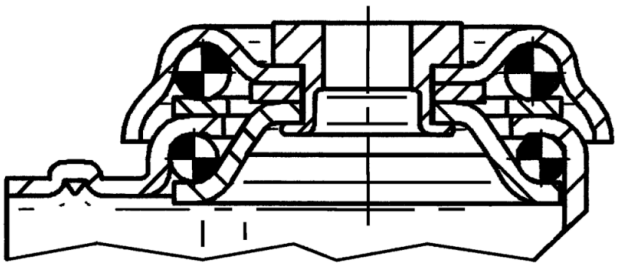

© Copyright 2026 TENTE International GmbH