PRODUCT INFORMATION

AGILA

2477DYK075R47-32-35

EAN 4031582341515



Image may differ from the original product

PERFORMANCE

Roll Performance	●●●○○
Movement noise	●●●○○
Attrition	●●●○○
Corrosion resistance	●●●○○

CORE ATTRIBUTES

Product name	Agila
Type	Swivel caster with total lock
Standard	EN12530 - Devices Castors
Load capacity at 1.8 mph	121.25 lb
Electric conductive	Yes
Stainless	no
Load capacity Static	242.51 lb
Temperature range (Minimum)	14 °F
Temperature range (Maximum)	104 °F
Overall height	4.06 in

HOUSING

Housing Material	Steel sheet, medium
Fork shape	Broad
Swivel bearing	Two ball races
Housing Color	Blue passivated
Offset	0.94 in
Swivel radius	3.15 in
Swivel interference	6.3 in

WHEEL

Body material	Sheet Steel
Tread material	Solid rubber, black, electric-conductive
Bearing	Cone ball bearing
Threadguards	With threadguard
Diameter	2.95 in
Tread width	0.98 in
Hardness of tread (A)	80 Shore A

FITTING

Fitting type	Synthetic expander, square
Expander fitting (Minimum)	1.26 in
Expander fitting (Maximum)	1.38 in
Hint	Please indicate required tube innerdiameter when ordering.

© Copyright 2026 TENTE International GmbH

AGILA

2477DYK075R47-32-35

EAN 4031582341515

BETTER MOBILITY. BETTER LIFE.

Product Drawings

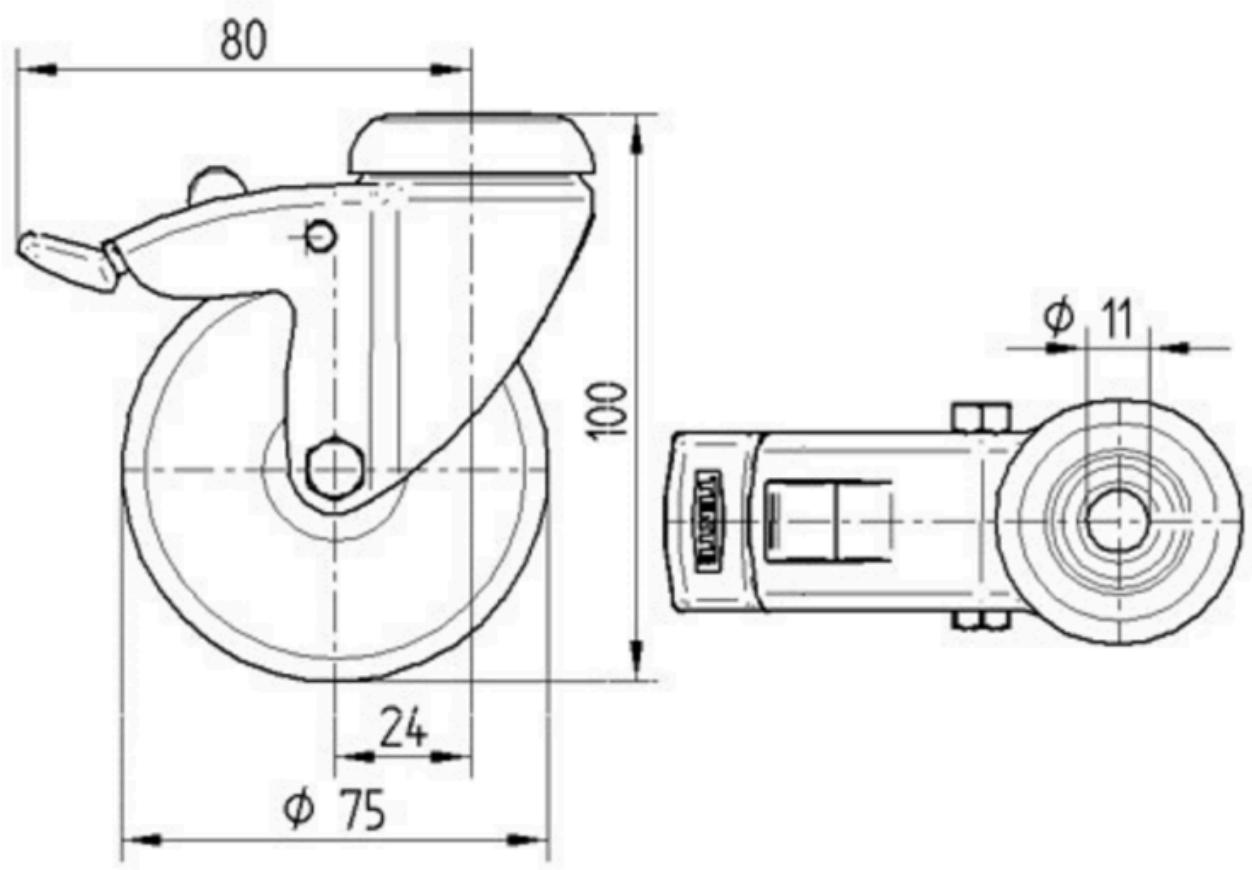

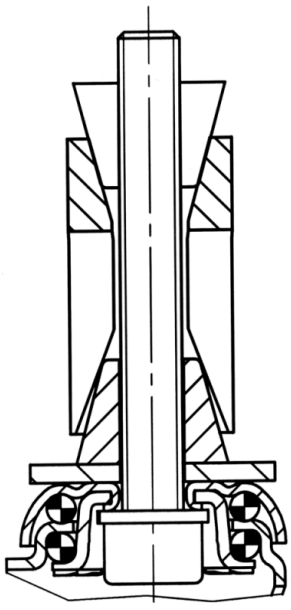

© Copyright 2026 TENTE International GmbH