PRODUCT INFORMATION

MAXTECH EVO

PBO150x38-Ø12 HL34 TFR

EAN 4031582400366



Image may differ from the original product

PERFORMANCE

Roll Performance	●●●○○
Movement Noise	●●●○○
Attrition	●●●○○
Corrosion Resistance	●●●○○

CORE ATTRIBUTES

Product Name	Maxtech evo
Type	Wheel
Load capacity at 3 km/h	35 kg
Electric Conductive	No
Stainless	No
Load capacity Static	70 kg
Overall weight	0.33 kg

WHEEL

Body material	Polypropylene
Tread Material Mix	Polyurethane, biosourced, injected
Bearing	Plain bearing
Threadguards	Without threadguard
Diameter	150 mm
Tread width	38 mm
Axle Hole Diameter	12 mm
Hub Length	34 mm

© Copyright 2026 TENTE International GmbH

MAXTECH EVO

PBO150x38-Ø12 HL34 TFR

EAN 4031582400366

BETTER MOBILITY. BETTER LIFE.

Product Drawings

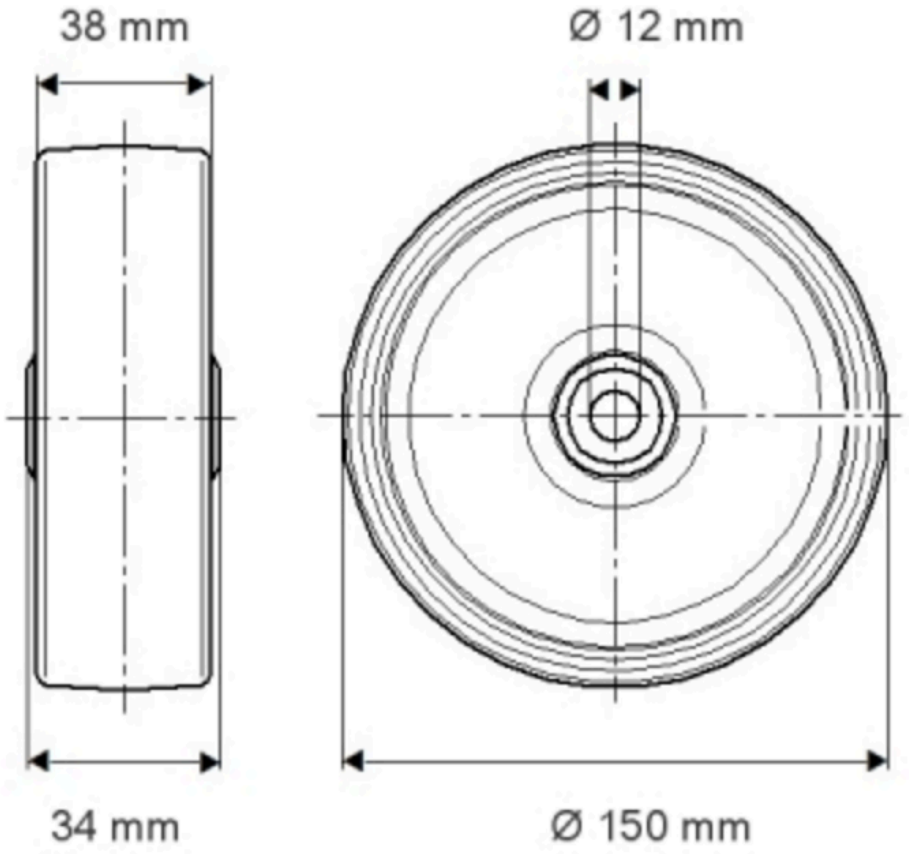

© Copyright 2026 TENTE International GmbH