PRODUCT INFORMATION

# INTEGRAL

## 2046UAP150R36-32S30 D 9002 4XM6

EAN 4031582300253
Order number 00035221

BETTER MOBILITY. BETTER LIFE.

Image may differ from the original product

## PERFORMANCE

| | |
|---|---|
| Roll performance | ●●●○○ |
| Movement noise | ●●●○○ |
| Attrition | ●●●●○ |
| Corrosion resistance | ●●●○○ |

## CORE ATTRIBUTES

| | |
|---|---|
| Product name | Integral |
| WeAssist Compatible | ✓ |
| Housing type | Swivel castor with central, total lock |
| Standard | EN12531 - Hospital Bed Castors |
| Load capacity at 3 km/h | 150 kg |
| Load capacity at 4 km/h | 150 kg |
| Load capacity Static | 450 kg |
| Temperature range (Minimum) | -25 °C |
| Temperature range (Maximum) | 80 °C |
| Overall height | 183 mm |
| Overall width | 62 mm |
| Overall weight | 1.083 kg |
| Certification | Tested and monitored by TÜV Süd |

IF Design Award

Red Dot Design Award

## WHEEL

| | |
|---|---|
| Body material | Polyamide |
| Tread material | Polyurethane, injected |
| Bearing | Precision ball bearing |
| Tread color | Slate grey (RAL7015) |
| Wheel color | Slate grey (RAL7015) |
| Threadguards | Integrated threadguard |
| Diameter | 150 mm |
| Tread width | 32 mm |
| Body width | 32 mm |
| Hardness of tread (A) | 92 Shore A |
| Hardness of tread (D) | 42 Shore D |

## HOUSING

| | |
|---|---|
| Material fork | Steel sheet, medium |
| Fork shape | Closed |
| Swivel bearing | Precision ball bearing |
| Colour | Grey white (RAL9002) |
| Offset | 40 mm |
| Swivel radius | 115 mm |
| Swivel interference | 230 mm |
| Dome diameter | 62 mm |

## FITTING

| | |
|---|---|
| Fitting type | Stem with cam hole for profile bars, short version |
| Bolt diameter | 32 mm |
| Bolt length | 51 mm |
| Bolt thread position | 7 mm |
| Bolt mounting holes quantity | 4 |

© Copyright 2025 TENTE International GmbH

# INTEGRAL

2046UAP150R36-32S30 D 9002 4XM6

EAN 4031582300253
Order number 00035221

BETTER MOBILITY. BETTER LIFE.

## TECHNICAL DRAWINGS

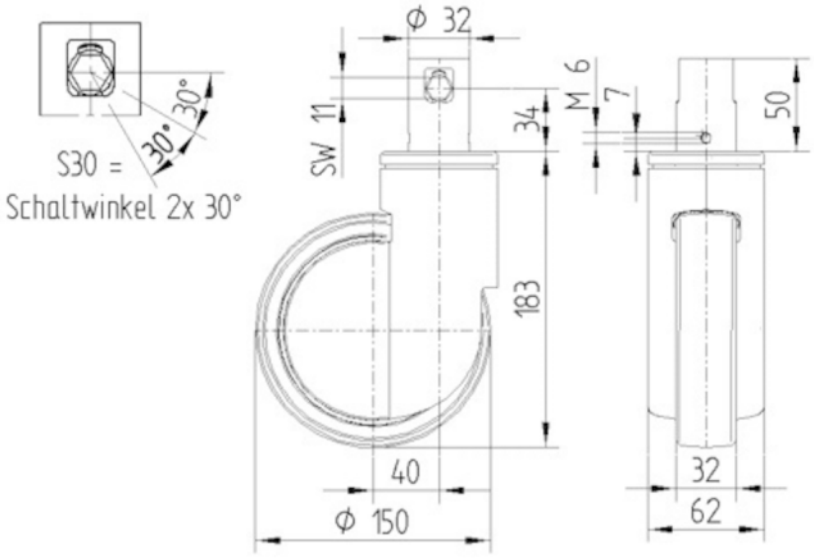


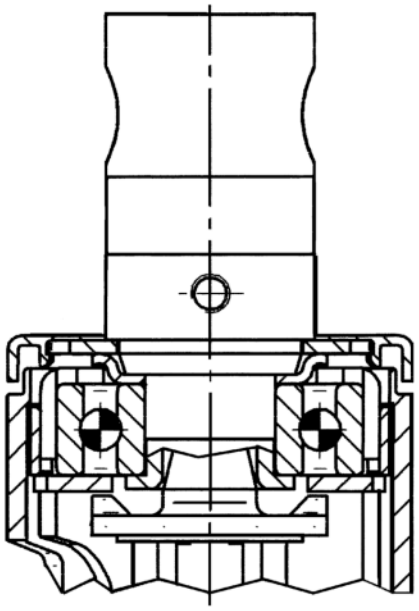

IF Design Award

Red Dot Design Award

© Copyright 2025 TENTE International GmbH