PRODUCT INFORMATION

ELASTECH

IFP 160x50-Ø25

EAN 4031582319828

BETTER MOBILITY. BETTER LIFE.



Image may differ from the original product

WHEEL

Tread hardness	soft
Body material	Aluminium
Tread Material Mix	Elastic tire, non-marking, vulcanized
Bearing	Precision ball bearing
Wheel Color	Grey / non marking
Threadguards	Without threadguard
Diameter	160 mm
Tread width	50 mm
Axle Hole Diameter	25 mm
Hub Length	60 mm
Body width	50 mm
Hardness of tread (A)	68 Shore A

PERFORMANCE

Roll Performance	●●○○○
Movement Noise	●●●●●
Attrition	●●●○○
Corrosion Resistance	●●●○○

CORE ATTRIBUTES

Product Name	Elastech
Type	Wheel
Standard	EN12532 - Transport Equipment
Load capacity at 4 km/h	350 kg
Load capacity at 6 km/h	280 kg
Electric Conductive	No
Stainless	No
Load capacity Static	700 kg
Temperature range (Minimum)	-20 °C
Temperature range (Maximum)	85 °C
Overall weight	1.18 kg

© Copyright 2026 TENTE International GmbH

ELASTECH

IFP 160x50-Ø25

EAN 4031582319828

Order number 00830803

Product Drawings

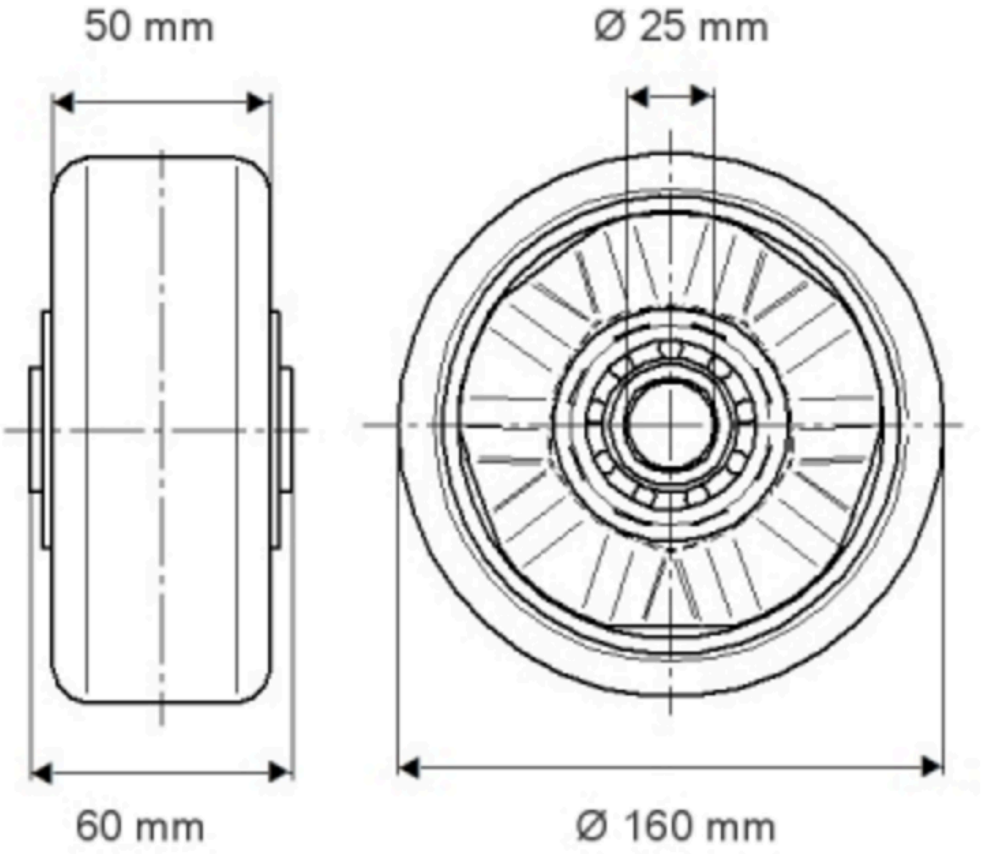

© Copyright 2026 TENTE International GmbH

ELASTECH

IFP 160x50-Ø25

EAN 4031582319328

Order number 00330803

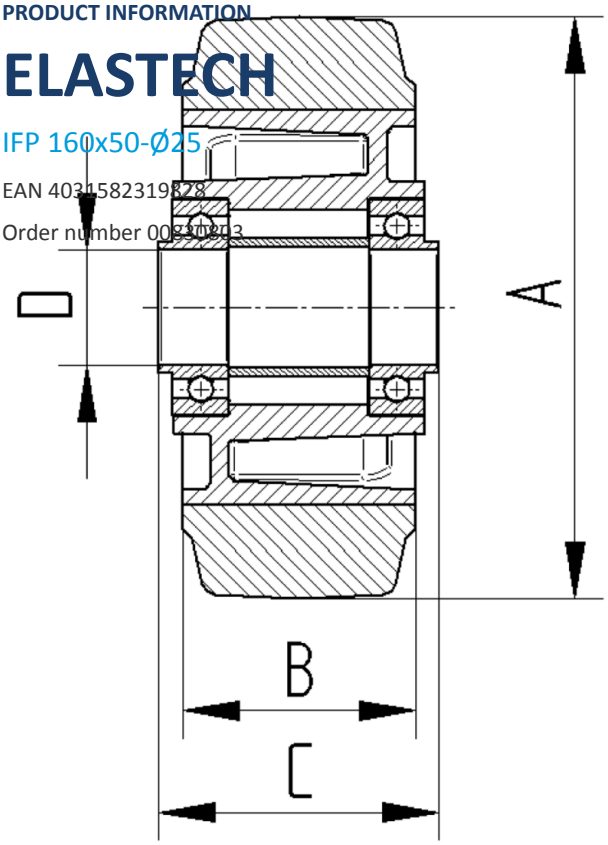

BETTER MOBILITY. BETTER LIFE.

© Copyright 2026 TENTE International GmbH