PRODUCT INFORMATION

# MAXTECH

## UAR080x30-Ø12 TFR

EAN 4031582392593

BETTER MOBILITY. BETTER LIFE.



Image may differ from the original product

### WHEEL

| | |
|---|---|
| Body material | Polyamide |
| Tread material | Polyurethane, injected |
| Bearing | Roller bearing |
| Threadguards | Without threadguard |
| Diameter | 3.15 in |
| Tread width | 1.18 in |
| Axle hole diameter | 0.47 in |
| Hub length | 1.75 in |
| Hardness of tread (D) | 40 Shore D |

### PERFORMANCE

| | |
|---|---|
| Roll Performance | ●●●○○ |
| Movement noise | ●●●○○ |
| Attrition | ●●●●○ |
| Corrosion resistance | ●●●○○ |

### CORE ATTRIBUTES

| | |
|---|---|
| Product name | Maxtech |
| Type | Wheel |
| Standard | EN12532 - Transport Equipment |
| Load capacity at 2.5 mph | 220.46 lb |
| Electric conductive | no |
| Stainless | no |
| Load capacity Static | 440.92 lb |
| Temperature range (Minimum) | -40 °F |
| Temperature range (Maximum) | 176 °F |
| Overall weight | 0.37 lb |

© Copyright 2026 TENTE International GmbH

# MAXTECH

UAR080x30-Ø12 TFR

EAN 4031582392593

BETTER MOBILITY. BETTER LIFE.

## Product Drawings

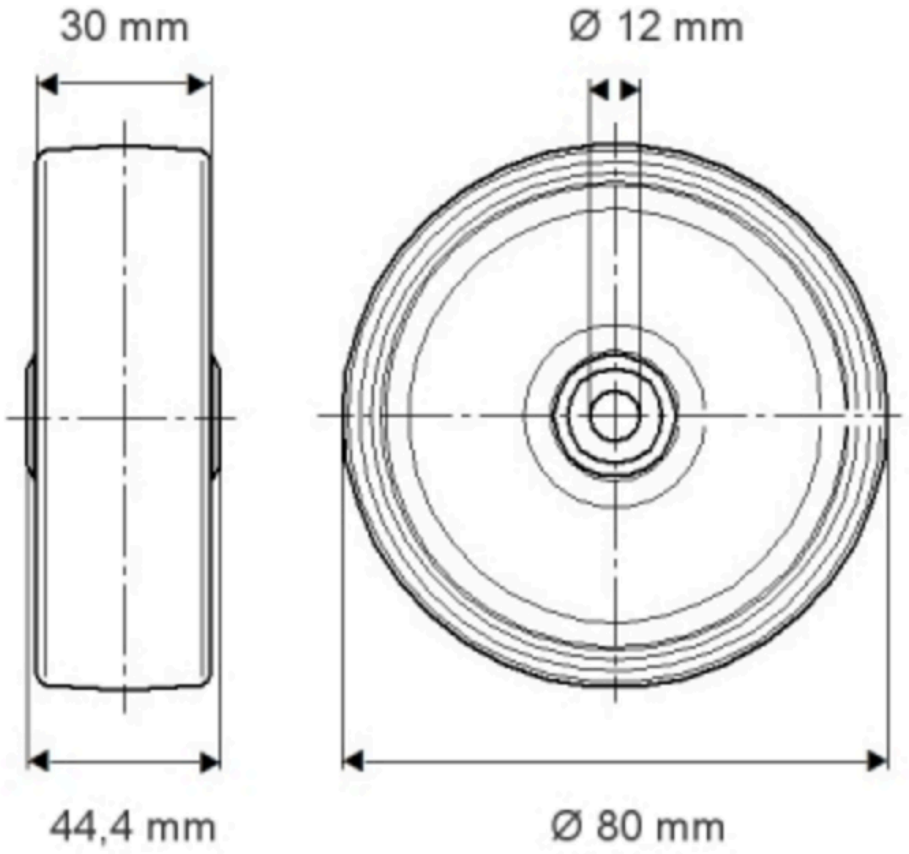


© Copyright 2026 TENTE International GmbH