PRODUCT INFORMATION

NOVATECH

FTF250x75-Ø80-4xØ15

EAN 4031582331707



Image may differ from the original product

PERFORMANCE

Roll Performance	●●●○○
Movement Noise	●●●○○
Attrition	●●●●○
Corrosion Resistance	●●●○○

CORE ATTRIBUTES

Product Name	Novatech
Type	Wheel
Electric Conductive	No
Stainless	No
Temperature range (Minimum)	-20 °C
Temperature range (Maximum)	60 °C
Overall weight	8.67 kg

WHEEL

Body material	Cast iron
Tread Material Mix	PUR casted premium
Bearing	Flanged wheel
Diameter	250 mm
Tread width	75 mm
Axle Hole Diameter	80 mm
Hardness of tread (A)	92 Shore A
Hole circle diameter	112 mm
Fitting hole diameter	15 mm
Suitable for	atlet

FITTING

Bolt mounting holes quantity	4

© Copyright 2026 TENTE International GmbH

NOVATECH

FTF250x75-Ø80-4xØ15

EAN 4031582331707

BETTER MOBILITY. BETTER LIFE.

Product Drawings

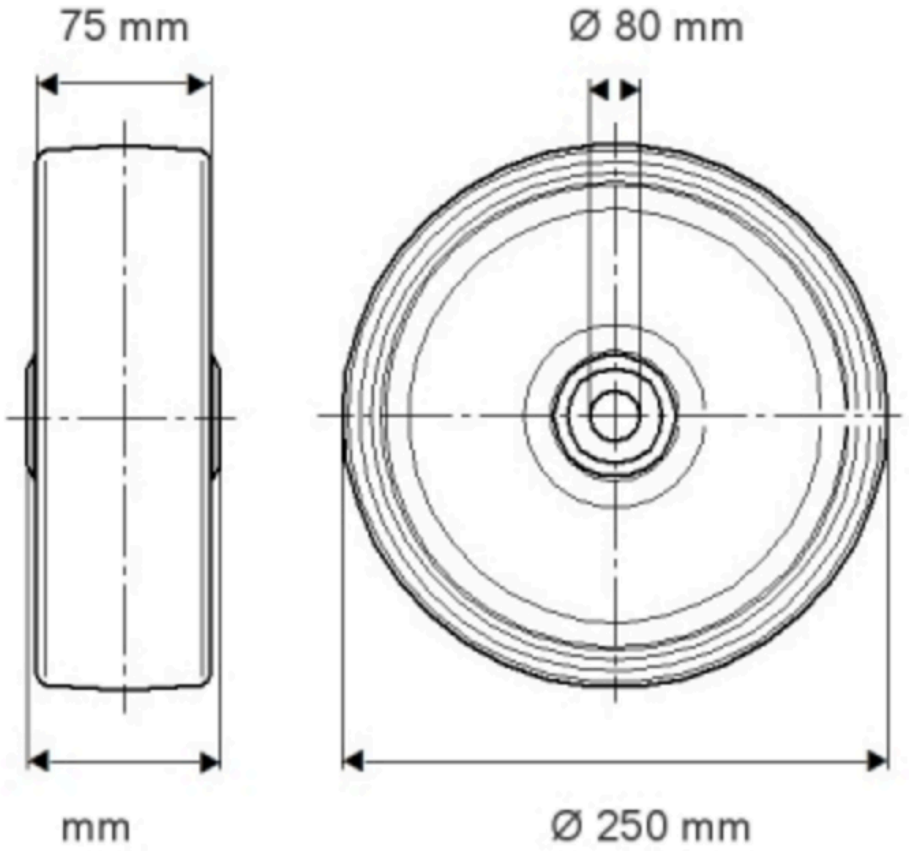

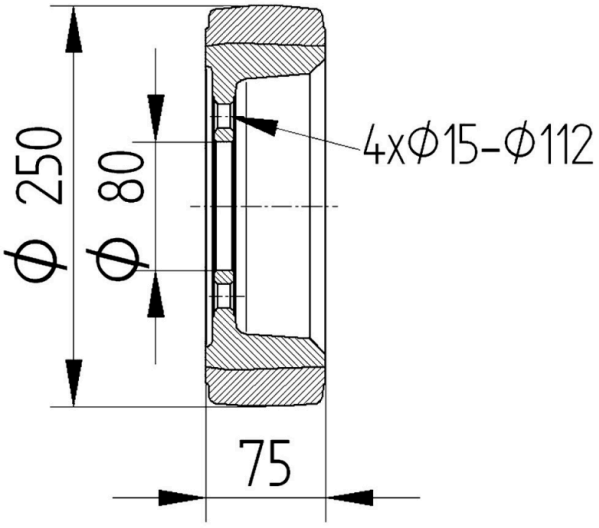

© Copyright 2026 TENTE International GmbH