PRODUCT INFORMATION

KAPPA LOAD

9652ITP160P63 flat kick pedal

EAN 4031582445299



Image may differ from the original product

PERFORMANCE

Roll Performance	●●●○○
Movement Noise	●●●○○
Attrition	●●●●○
Corrosion Resistance	●●●○○

CORE ATTRIBUTES

Product Name	Kappa load
Type	Swivel castor with total lock, head end of castor
Standard	EN12533 - Heavy Duty Castors
Load capacity at 4 km/h	800 kg
Load capacity at 6 km/h	640 kg
Electric Conductive	No
Stainless	No
Load capacity Static	1600 kg
Temperature range (Minimum)	-20 °C
Temperature range (Maximum)	60 °C
Overall Height	205 mm

HOUSING

Housing Material	Iron forged, heavy
Fork shape	Broad, reinforced
Swivel Bearing	Deep-groove ball thrust roller bearing
Offset	58 mm
Swivel radius	183 mm
Swivel interference	366 mm
Lubrication nipple	1

WHEEL

Tread profile	flat
Body material	Aluminium
Tread Material Mix	PUR casted premium
Bearing	Precision ball bearing
Axle	Screwed with nut
Threadguards	Without threadguard
Diameter	160 mm
Tread width	50 mm
Hardness of tread (A)	92 Shore A

FITTING

Fitting type	Medium rectangular plate
Plate length	135 mm
Plate width	110 mm
Plate hole length (Maximum)	105 mm
Plate hole width (Minimum)	75 mm
Plate hole width (Maximum)	80 mm
Plate hole diameter	11 mm

© Copyright 2026 TENTE International GmbH

KAPPA LOAD

9652ITP160P63 flat kick pedal

EAN 4031582445299

Product Drawings

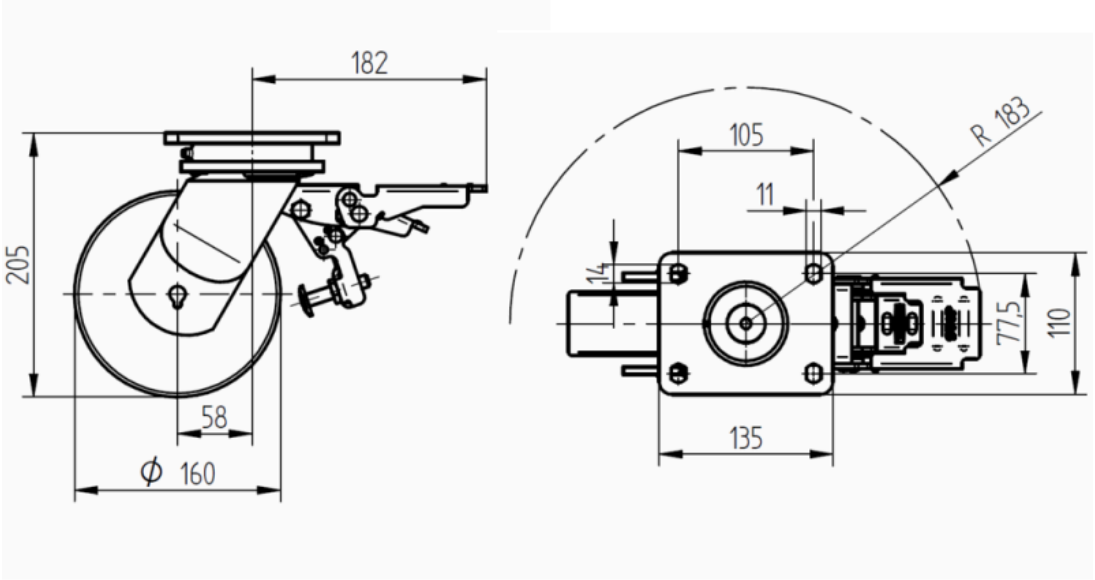

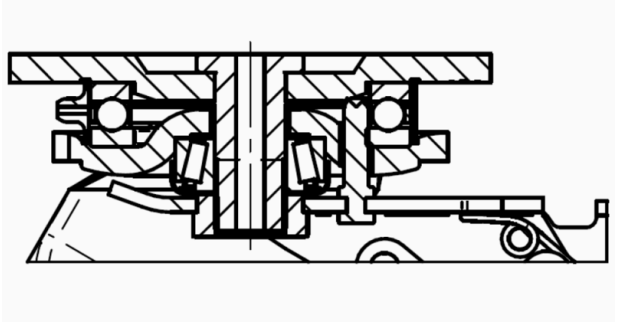

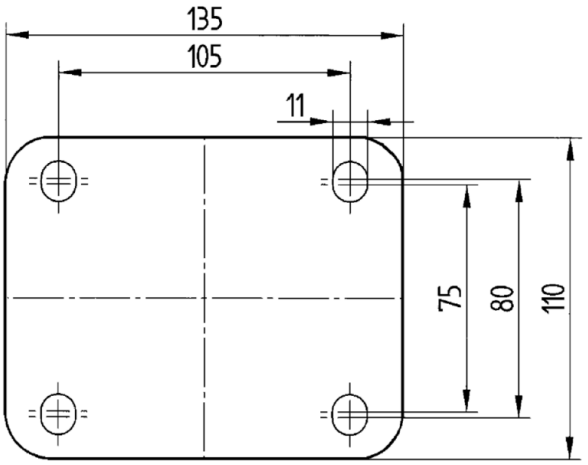

© Copyright 2026 TENTE International GmbH