PRODUCT INFORMATION

ICS

5327UAP100P52

EAN 4031582384727



Image may differ from the original product

PERFORMANCE

Roll Performance	●●●○○
Movement Noise	●●●●○
Attrition	●●●●○
Corrosion Resistance	●●●●○

CORE ATTRIBUTES

Product Name	ICS
Type	Swivel castor with total lock
Standard	EN12530 - Devices Castors
Load capacity at 3 km/h	100 kg
Electric Conductive	No
Stainless	No
Load capacity Static	200 kg
Temperature range (Minimum)	-10 °C
Temperature range (Maximum)	40 °C
Overall Height	141 mm

HOUSING

Housing Material	Polyamide
Fork shape	Slim
Swivel Bearing	Stem, swiveling
Offset	37 mm
Swivel interference	199 mm

WHEEL

Body material	Polyamide
Tread Material Mix	Polyurethane, injected
Bearing	Precision ball bearing
Threadguards	Integrated threadguard
Diameter	100 mm
Tread width	32 mm
Hardness of tread (A)	92 Shore A
Hardness of tread (D)	42 Shore D

FITTING

Fitting type	Rectangular plate, US-bolt hole spacing
Plate length	95 mm
Plate width	70 mm
Plate hole length (Minimum)	44.45 mm
Plate hole length (Maximum)	52 mm
Plate hole width (Minimum)	72 mm
Plate hole width (Maximum)	76 mm
Plate hole diameter	11 mm

IF Design Award

© Copyright 2026 TENTE International GmbH

ICS

5327UAP100P52

EAN 4031582384727

BETTER MOBILITY. BETTER LIFE.

Product Drawings

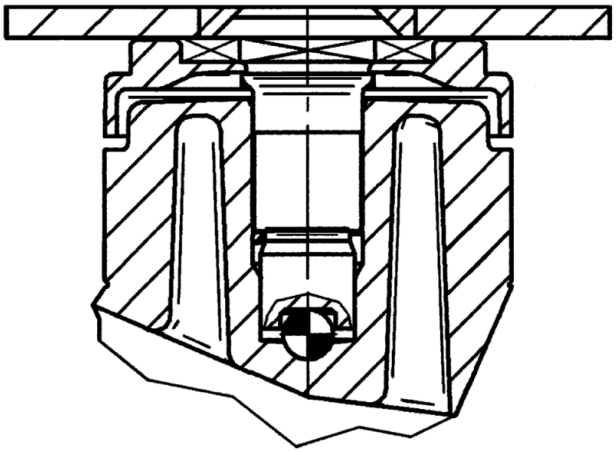

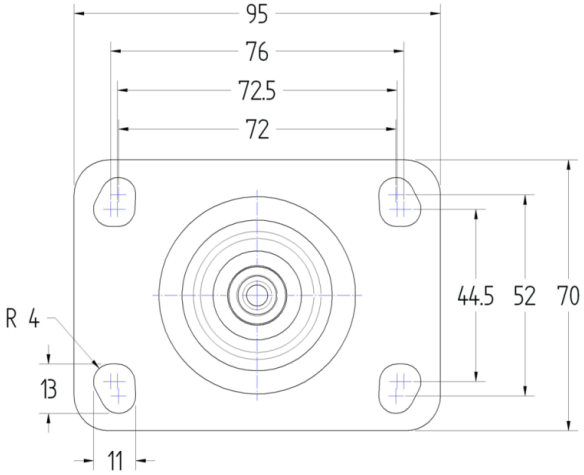

IF Design Award

© Copyright 2026 TENTE International GmbH