PRODUCT INFORMATION

NOVATECH

FTP250x50-Ø25 HL62

EAN 4031582331035



Image may differ from the original product

PERFORMANCE

Roll Performance	●●●●○
Movement Noise	●●●○○
Attrition	●●●●○
Corrosion Resistance	●●●○○

CORE ATTRIBUTES

Product Name	Novatech
Type	Wheel
Standard	EN12533 - Heavy Duty Castors
Load capacity at 4 km/h	1440 kg
Load capacity at 6 km/h	1200 kg
Electric Conductive	No
Stainless	No
Load capacity Static	2880 kg
Temperature range (Minimum)	-20 °C
Temperature range (Maximum)	60 °C

WHEEL

Body material	Cast iron
Tread Material Mix	PUR casted premium
Bearing	Precision ball bearing
Threadguards	With threadguard
Diameter	250 mm
Tread width	50 mm
Axle Hole Diameter	25 mm
Hub Length	62 mm
Hardness of tread (A)	92 Shore A

© Copyright 2026 TENTE International GmbH

NOVATECH

FTP250x50-Ø25 HL62

EAN 4031582331035

BETTER MOBILITY. BETTER LIFE.

Product Drawings

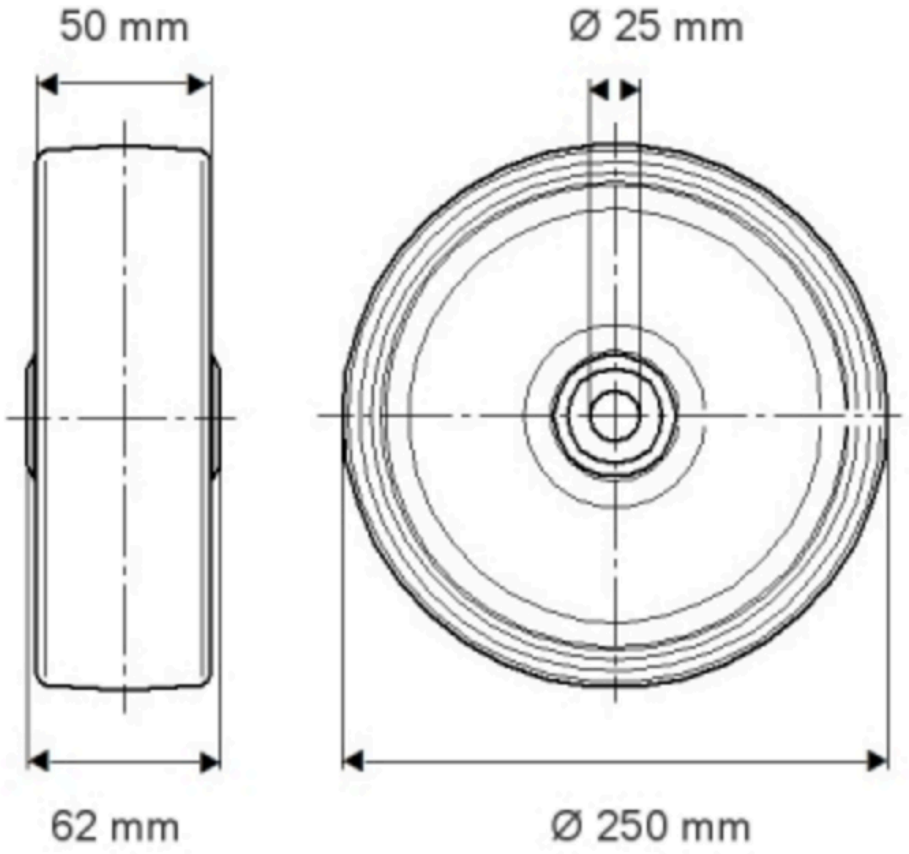

© Copyright 2026 TENTE International GmbH

NOVATECH

FTP250x50-Ø25 HL62

EAN 4031582331035

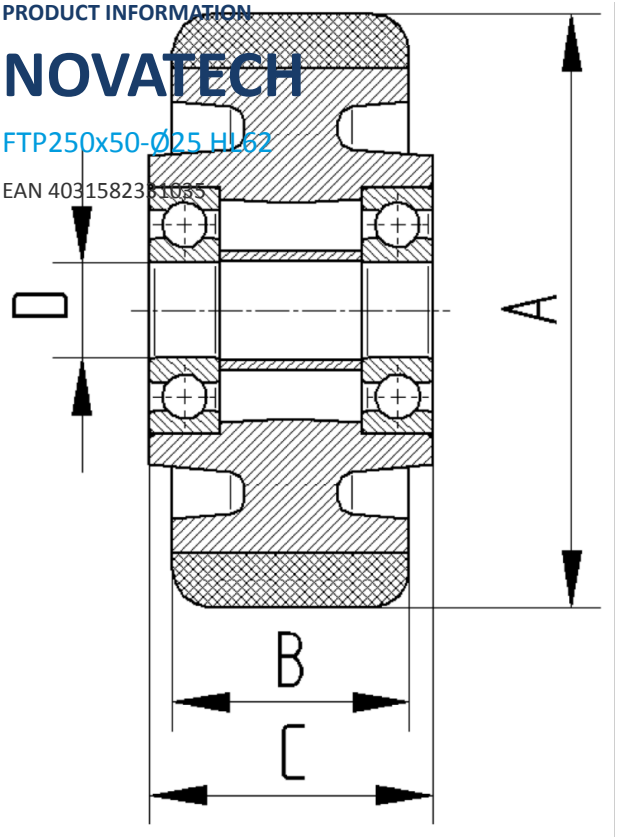

BETTER MOBILITY. BETTER LIFE.

© Copyright 2026 TENTE International GmbH