PRODUCT INFORMATION

LINEA E-LOCK

594EUSP150R36-32 N 9002 ro

Order number 00065310



Image may differ from the original product

PERFORMANCE

Roll Performance	●●●●●
Movement noise	●●●●○
Attrition	●●●●○
Corrosion resistance	●●●○○

CORE ATTRIBUTES

Product name	Linea E-Lock
Type	Swivel caster with electric locking system
Standard	EN12531 - Hospital Bed Castors
Load capacity at 1.8 mph	330.69 lb
Load capacity at 2.5 mph	330.69 lb
Electric conductive	Yes
Stainless	Yes
Load capacity Static	992.08 lb
Temperature range (Minimum)	14 °F
Temperature range (Maximum)	104 °F
Overall height	6.1 in
Overall width	2.8 in
Overall weight	3.34 lb

HOUSING

Housing Material	Polyamide
Fork shape	Twin wheel housing
Swivel bearing	Precision ball bearing
Housing Color	Gray white (RAL9002)
Offset	1.87 in
Swivel radius	5 in
Swivel interference	10 in
Dome diameter	1.79 in

WHEEL

Body material	Polyamide
Tread material	Polyurethane, injected, electric-conductive
Bearing	Precision ball bearing
Wheel color	Gray white (RAL9002)
Threadguards	With threadguard
Diameter	5.91 in
Tread width	0.59 in
Body width	0.59 in
Hardness of tread (A)	92 Shore A
Hardness of tread (D)	42 Shore D

FITTING

Fitting type	Stem with cam hole for profile bars, short version
Bolt diameter	1.26 in
Bolt length	1.97 in
Bolt thread position	0.28 in
Bolt mounting holes quantity	2

Deutscher Designer Club

Interzum Award

IF Design Award

© Copyright 2026 TENTE International GmbH

LINEA E-LOCK

594EUSP150R36-32 N 9002 ro

Order number 00065310

BETTER MOBILITY. BETTER LIFE.

Product Drawings

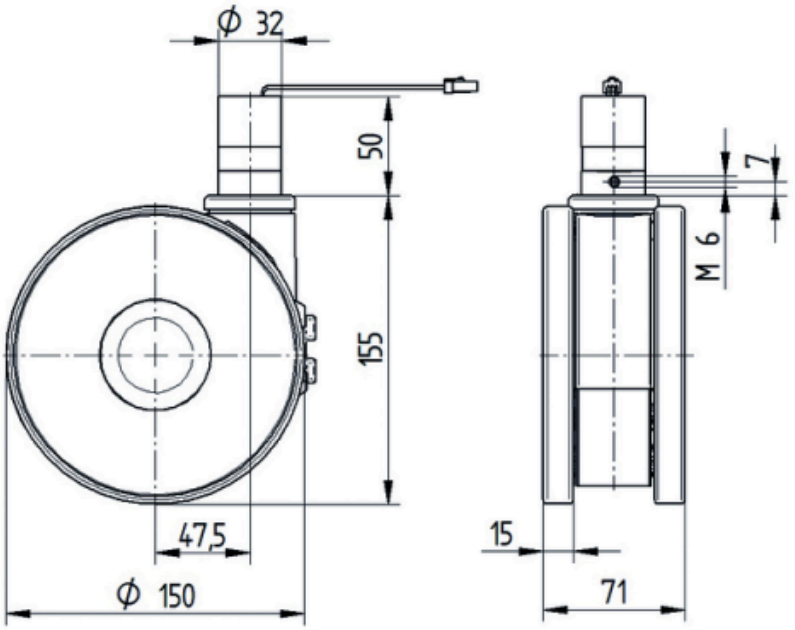

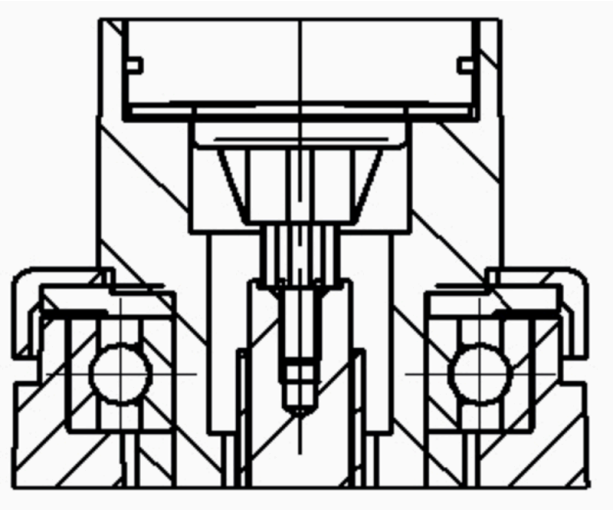

© Copyright 2026 TENTE International GmbH