PRODUCT INFORMATION

NOVATECH

ETP060x20-Ø20 HL12

EAN 4031582419030



Image may differ from the original product

WHEEL

Body material	Steel, iron
Tread Material Mix	PUR casted premium
Bearing	Precision ball bearing
Threadguards	With threadguard
Diameter	60 mm
Tread width	20 mm
Axle Hole Diameter	20 mm
Hub Length	12 mm
Hardness of tread (A)	92 Shore A

PERFORMANCE

Roll Performance	●●●●○
Movement Noise	●●●○○
Attrition	●●●●○
Corrosion Resistance	●●●○○

CORE ATTRIBUTES

Product Name	Novatech
Type	Wheel
Load capacity at 3 km/h	100 kg
Electric Conductive	No
Stainless	No
Load capacity Static	200 kg
Temperature range (Minimum)	-20 °C
Temperature range (Maximum)	60 °C
Overall weight	0.14 kg

© Copyright 2026 TENTE International GmbH

NOVATECH

ETP060x20-Ø20 HL12

EAN 4031582419030

BETTER MOBILITY. BETTER LIFE.

Product Drawings

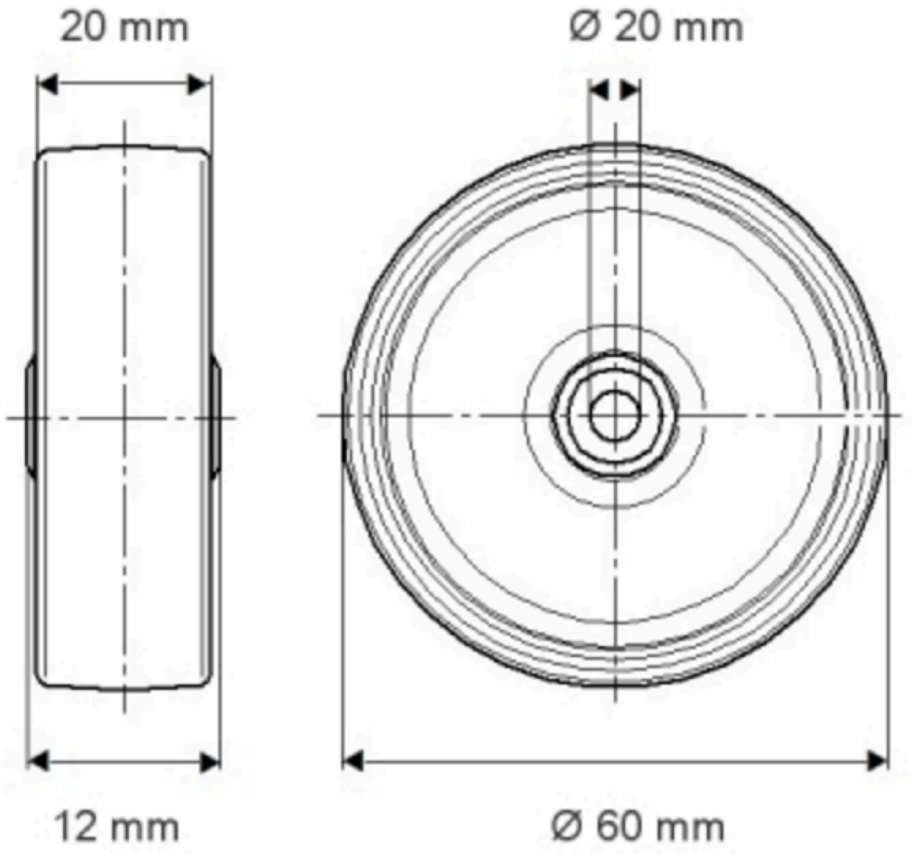

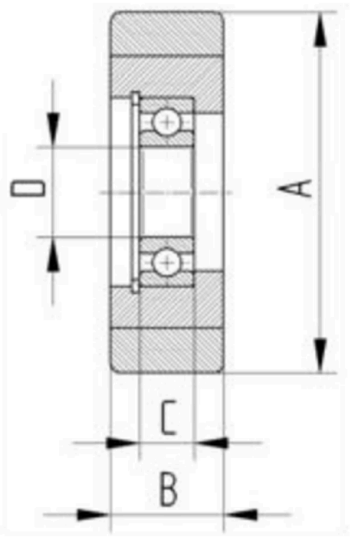

© Copyright 2026 TENTE International GmbH