PRODUCT INFORMATION

PURETECH

PVR 250x60-Ø25

EAN 4031582321340



Image may differ from the original product

WHEEL

Body material	Polypropylene
Tread material	Solid rubber, black
Bearing	Roller bearing
Wheel color	Graphite black (RAL9011)
Threadguards	Without threadguard
Diameter	9.84 in
Tread width	2.36 in
Axle hole diameter	0.98 in
Hub length	2.91 in
Body width	2.36 in
Hardness of tread (A)	80 Shore A

PERFORMANCE

Roll Performance	●●●○○
Movement noise	●●●●○
Attrition	●●●○○
Corrosion resistance	●●●○○

CORE ATTRIBUTES

Product name	Puretech
Type	Wheel
Standard	EN12532 - Transport Equipment
Load capacity at 2.5 mph	650.36 lb
Electric conductive	no
Stainless	no
Load capacity Static	1300.73 lb
Temperature range (Minimum)	-4 °F
Temperature range (Maximum)	140 °F
Overall weight	6.33 lb

© Copyright 2026 TENTE International GmbH

PURETECH

PVR 250x60-Ø25

EAN 4031582321340

Order number 00050608

Product Drawings

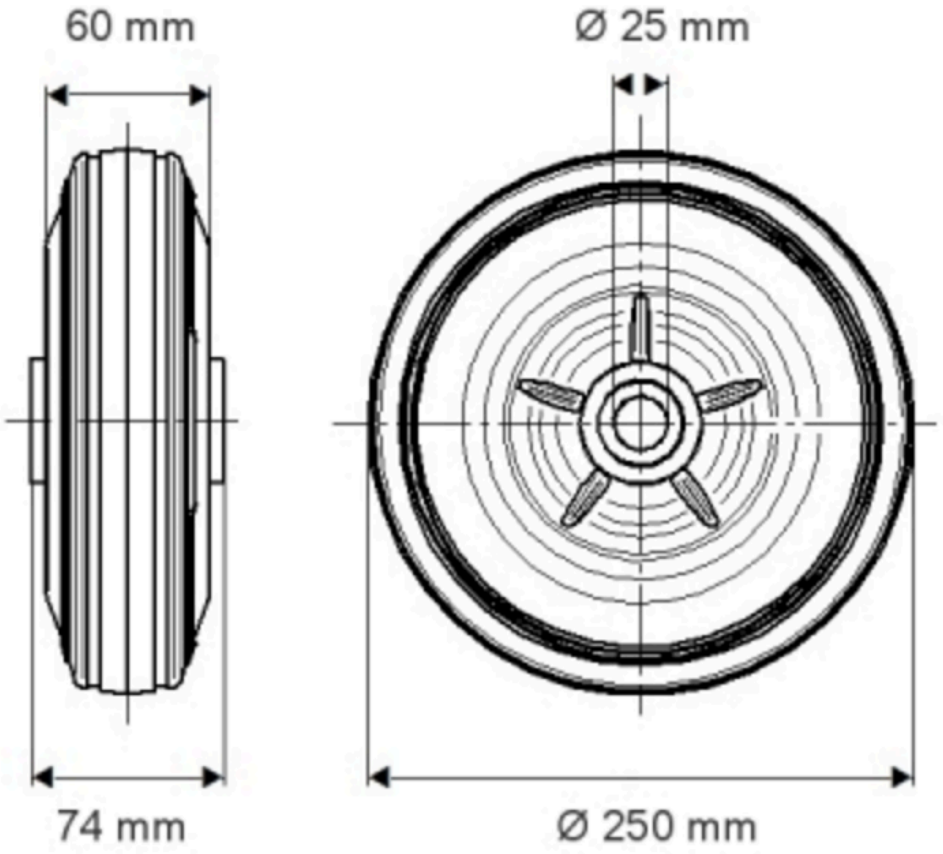

© Copyright 2026 TENTE International GmbH