PRODUCT INFORMATION

LUMINA

A523YOI050B10-11x20 DOM45

EAN 4031582341423



Image may differ from the original product

PERFORMANCE

Roll Performance	●●●○○
Movement noise	●●●○○
Attrition	●●●○○
Corrosion resistance	●●●○○

CORE ATTRIBUTES

Product name	Lumina
Type	Swivel caster with intermittend brake
Standard	EN12528 - Furniture Castors
Electric conductive	Yes
Stainless	no
Temperature range (Minimum)	14 °F
Temperature range (Maximum)	104 °F
Overall height	2.4 in
Overall width	2.17 in
Overall weight	0.21 lb

HOUSING

Housing Material	Polypropylene
Fork shape	Twin wheel housing, closed, with dome
Swivel bearing	Stem, swiveling
Swivel radius	2.01 in
Swivel interference	4.02 in
Dome diameter	1.77 in

WHEEL

Body material	Polypropylene, electric conductive
Tread material	Identical with wheel body
Bearing	Plain bearing with spacer tube
Axle	Riveted
Threadguards	Without threadguard
Diameter	1.97 in
Tread width	0.31 in
Hardness of tread (D)	65 Shore D

FITTING

Fitting type	Stem with grip ring, with collar
Stem diameter	0.43 in

© Copyright 2026 TENTE International GmbH

LUMINA

A523YOI050B10-11x20 DOM45

EAN 4031582341423

BETTER MOBILITY. BETTER LIFE.

Product Drawings

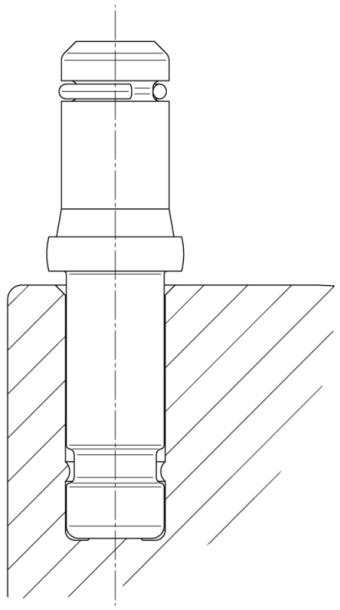

© Copyright 2026 TENTE International GmbH