PRODUCT INFORMATION

ALPHA STAINLESS

8477PJD125P62 TFR

EAN 4031582386752

BETTER MOBILITY. BETTER LIFE.



Image may differ from the original product

PERFORMANCE

Roll Performance	●●●○○
Movement noise	●●●○○
Attrition	●●●○○
Corrosion resistance	●●●●●

CORE ATTRIBUTES

Product name	Alpha stainless
Type	Swivel caster with total lock
Standard	EN12532 - Transport Equipment
Load capacity at 2.5 mph	220.46 lb
Electric conductive	no
Stainless	Yes
Load capacity Static	440.92 lb
Temperature range (Minimum)	-4 °F
Temperature range (Maximum)	140 °F
Overall height	6.1 in
Overall weight	2.01 lb

HOUSING

Housing Material	Stainless steel, heavy
Fork shape	Broad
Swivel bearing	Two ball races
Housing Color	Stainless steel
Offset	1.57 in
Swivel radius	4.76 in
Swivel interference	9.53 in

WHEEL

Body material	Polypropylene
Tread material	Thermoplastic rubber
Bearing	Roller bearing, stainless
Axle	Screwed with nut
Diameter	4.92 in
Tread width	1.26 in
Hardness of tread (A)	87 Shore A

FITTING

Fitting type	Rectangular plate
Plate length	4.13 in
Plate width	3.35 in
Plate hole length (Minimum)	3.03 in
Plate hole length (Maximum)	3.15 in
Plate hole width (Maximum)	2.36 in
Plate hole diameter	0.35 in

© Copyright 2026 TENTE International GmbH

ALPHA STAINLESS

8477PJD125P62 TFR

EAN 4031582386752

BETTER MOBILITY. BETTER LIFE.

Product Drawings

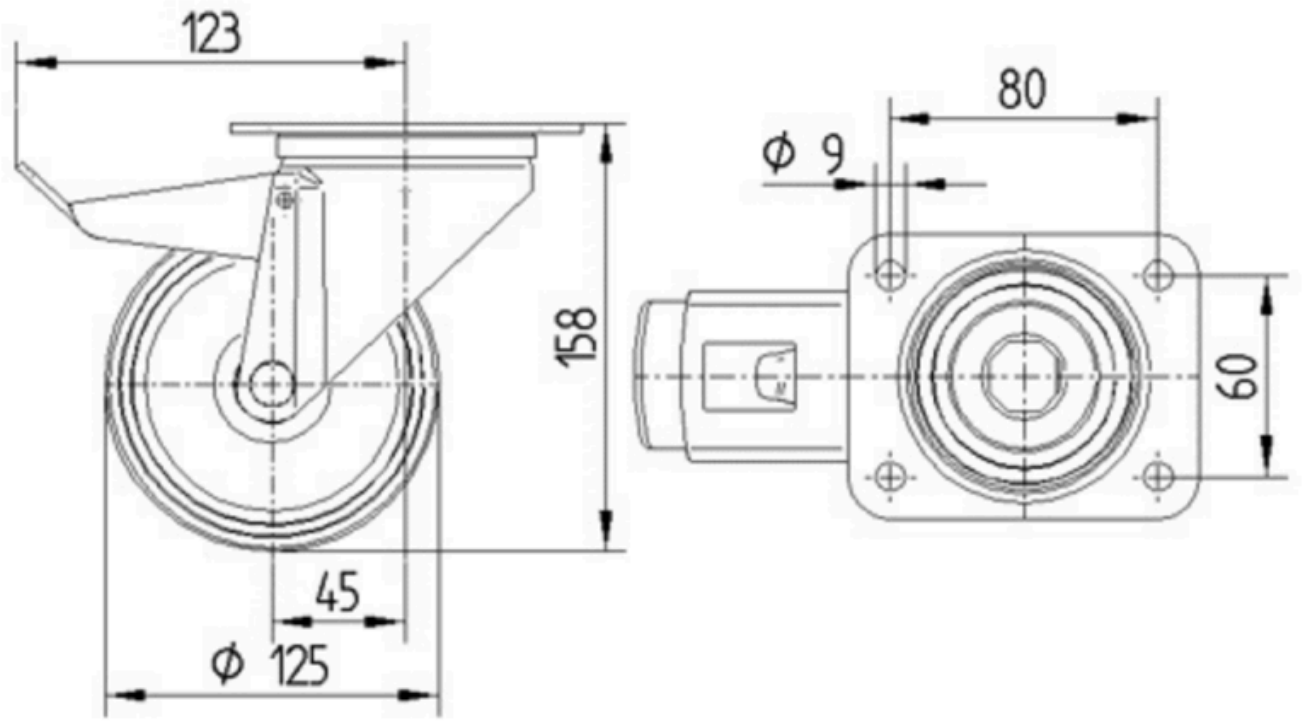

© Copyright 2026 TENTE International GmbH