PRODUCT INFORMATION

KAPPA

9688FTP200P63 CL67 WH-w60

EAN 4031582316216



Image may differ from the original product

PERFORMANCE

Roll Performance	●●●●○
Movement Noise	●●●○○
Attrition	●●●●○
Corrosion Resistance	●●●●○

CORE ATTRIBUTES

Product Name	Kappa
Type	Fixed castor
Standard	EN12533 - Heavy Duty Castors
Load capacity at 4 km/h	1440 kg
Load capacity at 6 km/h	1200 kg
Electric Conductive	No
Stainless	No
Load capacity Static	2400 kg
Temperature range (Minimum)	-10 °C
Temperature range (Maximum)	60 °C
Overall Height	245 mm
Overall width	98 mm
Overall weight	6.57 kg

HOUSING

Housing Material	Iron forged, heavy
Fork shape	Broad, reinforced
Housing Color	Blue passivated
Lubrication nipple	1
Dome diameter	96 mm

WHEEL

Body material	Cast iron
Tread Material Mix	PUR casted premium
Bearing	Precision ball bearing
Axle	Screwed with nut
Wheel Color	Honey yellow (RAL1005)
Threadguards	With threadguard
Diameter	200 mm
Tread width	60 mm
Body width	60 mm
Hardness of tread (A)	92 Shore A
Hardness of tread (D)	42 Shore D

FITTING

Fitting type	Medium rectangular plate
Plate length	135 mm
Plate width	110 mm
Plate hole length (Minimum)	75 mm
Plate hole length (Maximum)	80 mm
Plate hole width (Minimum)	75 mm
Plate hole width (Maximum)	105 mm
Plate hole diameter	11 mm

© Copyright 2026 TENTE International GmbH

KAPPA

9688FTP200P63 CL67 WH-w60

EAN 4031582316216

Order number 00803487

Product Drawings

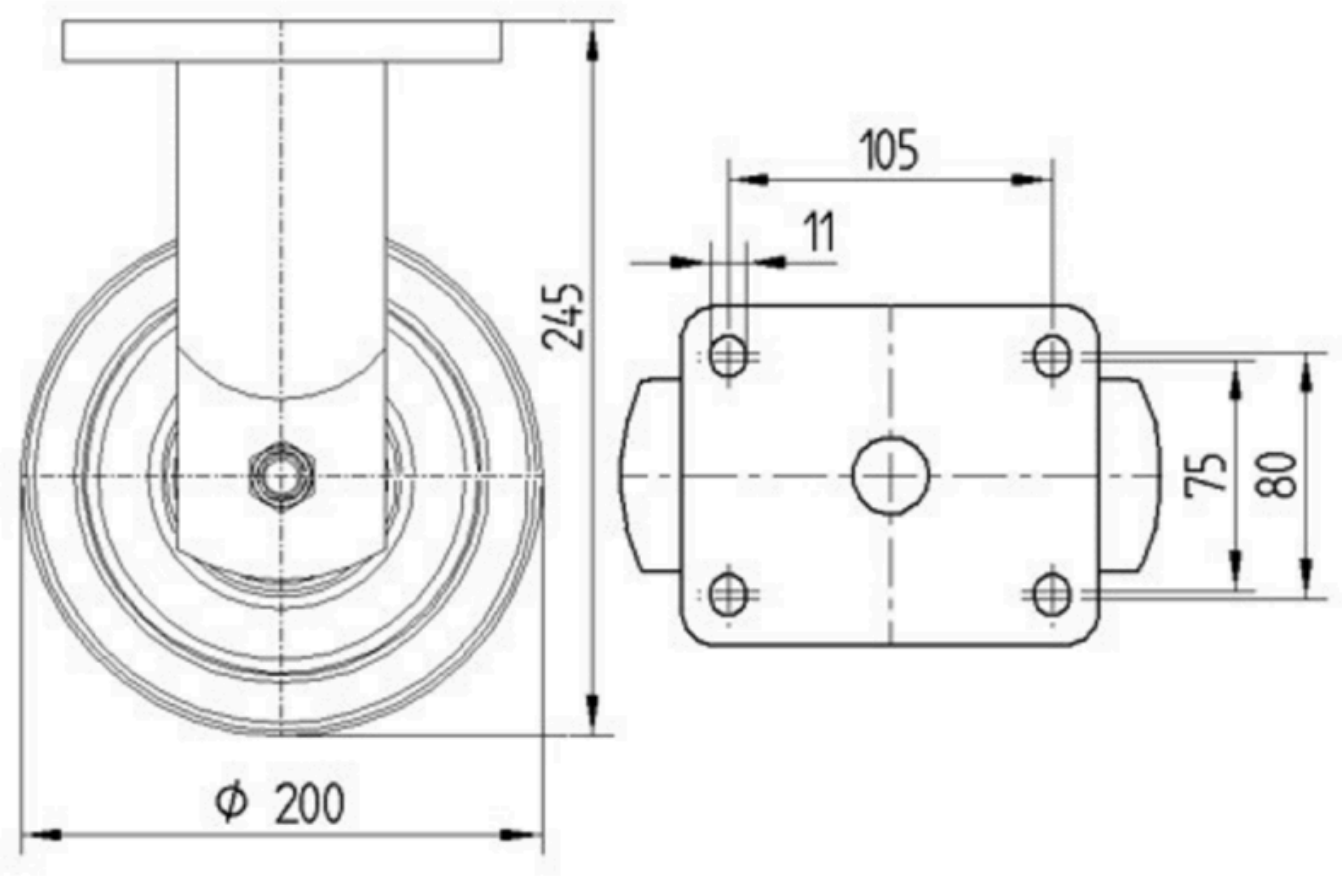

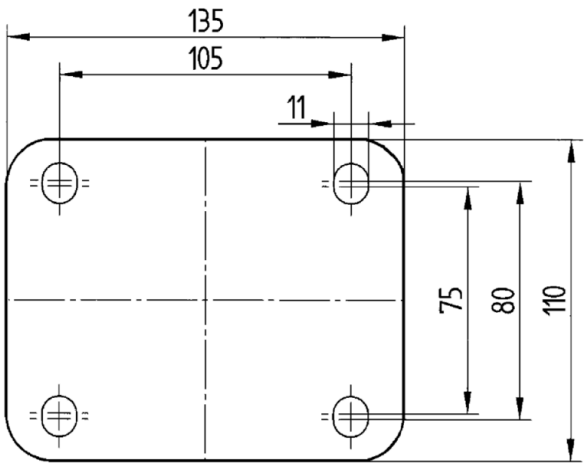

© Copyright 2026 TENTE International GmbH