PRODUCT INFORMATION

ZETA

4681SFP200P63

EAN 4031582444759

BETTER MOBILITY. BETTER LIFE.



Image may differ from the original product

PERFORMANCE

Roll Performance	●●●○○
Movement noise	●●●●●
Attrition	●●●○○
Corrosion resistance	●●●○○

CORE ATTRIBUTES

Product name	Zeta
Type	Swivel caster with directional lock
Standard	EN12532 - Transport Equipment
Load capacity at 2.5 mph	1322.77 lb
Load capacity at 3.7 mph	1102.31 lb
Electric conductive	no
Stainless	no
Load capacity Static	2645.54 lb
Temperature range (Minimum)	-4 °F
Temperature range (Maximum)	176 °F
Overall height	9.45 in
Overall weight	11.54 lb

HOUSING

Housing Material	Steel sheet, very heavy
Fork shape	Broad, reinforced
Swivel bearing	Two ball races, reinforced or stainless
Housing Color	Blue passivated
Offset	2.17 in
Swivel interference	17.24 in

WHEEL

Tread hardness	soft
Body material	Sheet steel, heavy
Tread material	Elastic tire, non-marking, vulcanized
Bearing	Precision ball bearing
Axle	Screwed with nut
Threadguards	With threadguard
Diameter	7.87 in
Tread width	1.97 in
Hardness of tread (A)	67 Shore A

FITTING

Fitting type	Rectangular plate
Plate length	5.39 in
Plate width	4.13 in
Plate hole length (Maximum)	4.13 in
Plate hole width (Minimum)	2.95 in
Plate hole width (Maximum)	3.15 in
Plate hole diameter	0.43 in

© Copyright 2026 TENTE International GmbH

ZETA

4681SFP200P63

EAN 4031582444759

BETTER MOBILITY. BETTER LIFE.

Product Drawings

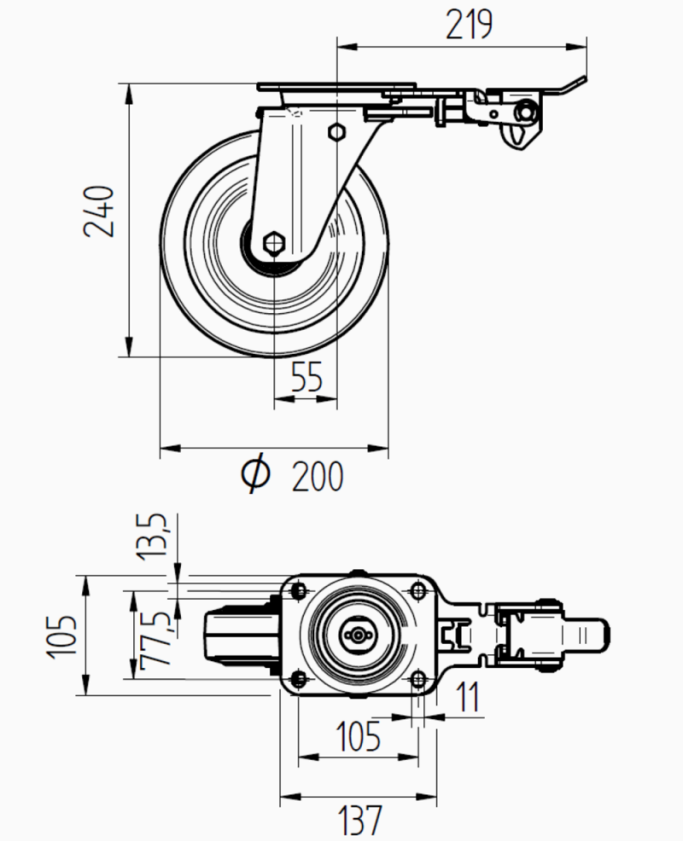

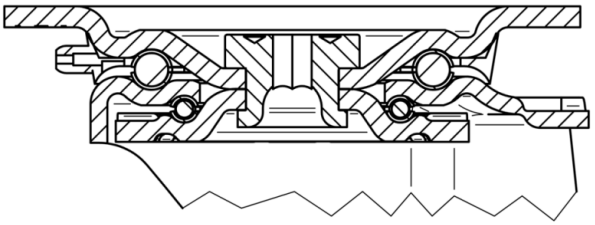

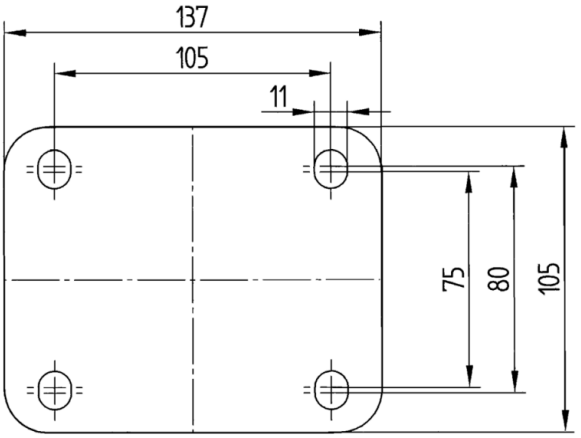

© Copyright 2026 TENTE International GmbH