PRODUCT INFORMATION

PURETECH AIR

PPO400x100-Ø20 HL74 4PR TFR

EAN 4031582394078



Image may differ from the original product

WHEEL

Tread hardness	soft
Body material	Polypropylene
Tread material	Pneumatic tire, line profile
Bearing	Plain bearing
Threadguards	Without threadguard
Diameter	15.75 in
Tread width	3.94 in
Axle hole diameter	0.79 in
Hub length	2.91 in
Hardness of tread (A)	55 Shore A

PERFORMANCE

Roll Performance	● ● ● ○ ○
Movement noise	● ● ● ○ ○
Attrition	● ● ● ○ ○
Corrosion resistance	● ● ● ○ ○

CORE ATTRIBUTES

Product name	Puretech air
Type	Wheel
Load capacity at 1.8 mph	308.65 lb
Electric conductive	no
Stainless	no
Load capacity Static	617.29 lb
Overall weight	4.17 lb

© Copyright 2026 TENTE International GmbH

PURETECH AIR

PPO400x100-Ø20 HL74 4PR TFR

EAN 4031582394078

BETTER MOBILITY. BETTER LIFE.

Product Drawings

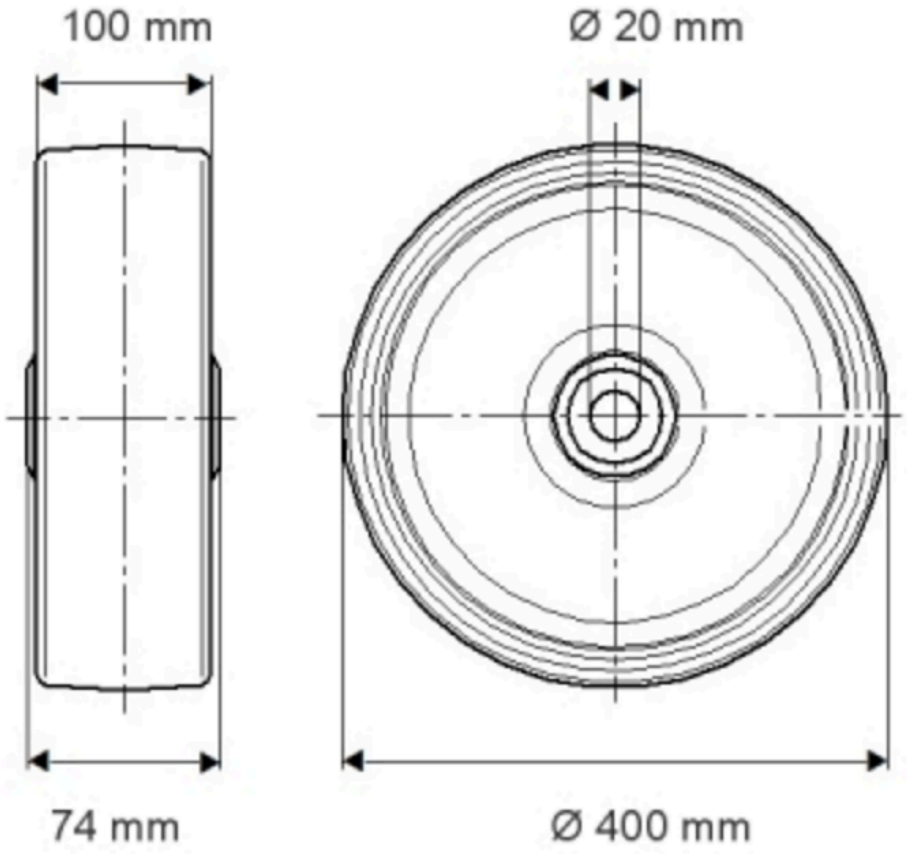

© Copyright 2026 TENTE International GmbH