PRODUCT INFORMATION

NOVATECH

ETP095x40-Ø20 HL45

EAN 4031582330403



Image may differ from the original product

WHEEL

Body material	Steel, iron
Tread Material Mix	PUR casted premium
Bearing	Precision ball bearing
Threadguards	With threadguard
Diameter	95 mm
Tread width	40 mm
Axle Hole Diameter	20 mm
Hub Length	45 mm
Hardness of tread (A)	92 Shore A
Bearing type	6204ZV

PERFORMANCE

Roll Performance	●●●●○
Movement Noise	●●●○○
Attrition	●●●●○
Corrosion Resistance	●●●○○

CORE ATTRIBUTES

Product Name	Novatech
Type	Wheel
Load capacity at 3 km/h	400 kg
Electric Conductive	No
Stainless	No
Load capacity Static	800 kg
Temperature range (Minimum)	-20 °C
Temperature range (Maximum)	60 °C
Overall weight	1.59 kg

© Copyright 2026 TENTE International GmbH

NOVATECH

ETP095x40-Ø20 HL45

EAN 4031582330403

BETTER MOBILITY. BETTER LIFE.

Product Drawings

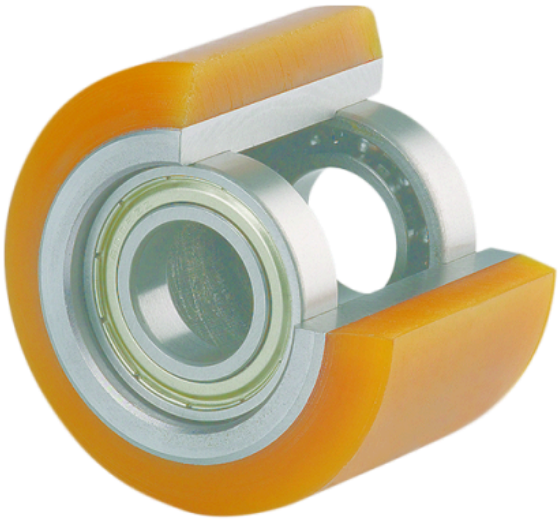

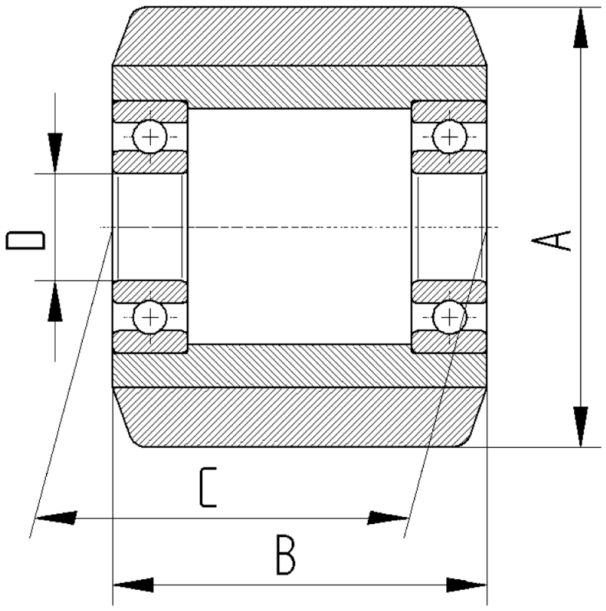

© Copyright 2026 TENTE International GmbH