PRODUCT INFORMATION

ALPHA

3470BOG100P62 TUK

EAN 4031582413403

BETTER MOBILITY. BETTER LIFE.



Image may differ from the original product

PERFORMANCE

Roll Performance	●●●●○
Movement noise	●●●○○
Attrition	●●●●●
Corrosion resistance	●●●●●

CORE ATTRIBUTES

Product name	Alpha
Type	Swivel caster
Standard	EN12532 - Transport Equipment
Load capacity at 2.5 mph	275.58 lb
Electric conductive	no
Stainless	no
Load capacity Static	551.16 lb
Temperature range (Minimum)	-40 °F
Temperature range (Maximum)	536 °F
Overall height	5.04 in
Overall weight	1.48 lb

HOUSING

Housing Material	Steel sheet, heavy
Fork shape	Broad
Swivel bearing	Two ball races
Housing Color	Blue passivated
Offset	1.57 in
Swivel radius	3.54 in
Swivel interference	7.09 in

WHEEL

Body material	Plastic thermoset, heat-resistant
Tread material	Identical with wheel body
Bearing	Dry bearing bush
Axle	Screwed with nut
Diameter	3.94 in
Tread width	1.38 in
Hardness of tread (D)	85 Shore D

FITTING

Fitting type	Rectangular plate
Plate length	4.13 in
Plate width	3.15 in
Plate hole length (Minimum)	3.03 in
Plate hole length (Maximum)	3.15 in
Plate hole width (Maximum)	2.36 in
Plate hole diameter	0.35 in

© Copyright 2026 TENTE International GmbH

ALPHA

3470BOG100P62 TUK

EAN 4031582413403

Product Drawings

3470U00100P62-neu

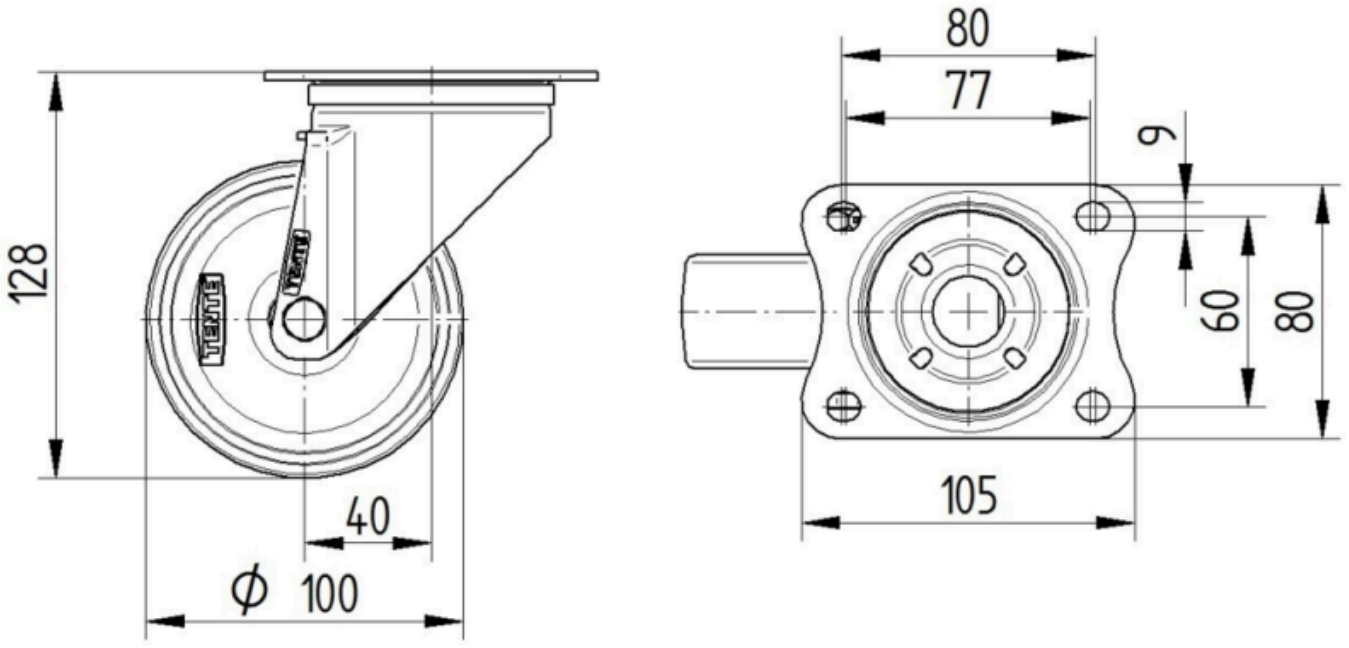

Platte 3470-080P62-105x80

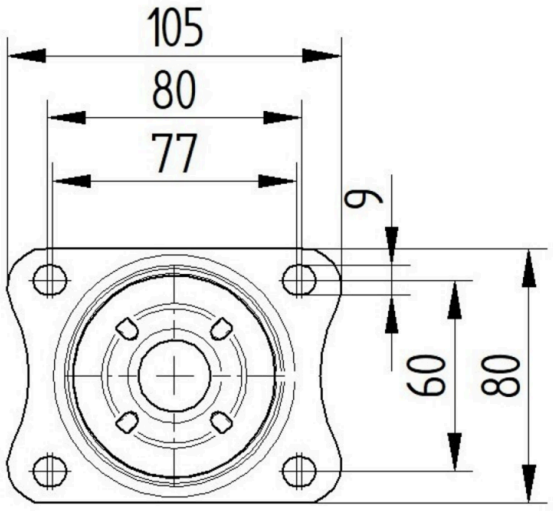

© Copyright 2026 TENTE International GmbH