PRODUCT INFORMATION

AGILA

2477UAP125R07-Ø21,5-24

EAN 4031582327168



Image may differ from the original product

PERFORMANCE

Roll Performance	●●●○○
Movement Noise	●●●○○
Attrition	●●●●○
Corrosion Resistance	●●●○○

CORE ATTRIBUTES

Product Name	Agila
Type	Swivel castor with total lock
Standard	EN12530 - Devices Castors
Load capacity at 3 km/h	100 kg
Electric Conductive	No
Stainless	No
Load capacity Static	200 kg
Temperature range (Minimum)	-10 °C
Temperature range (Maximum)	40 °C
Overall Height	163 mm
Overall weight	1.06 kg

HOUSING

Housing Material	Steel sheet, medium
Fork shape	Broad
Swivel Bearing	Two ball races
Housing Color	Blue passivated
Offset	41 mm
Swivel radius	131 mm
Swivel interference	262 mm

WHEEL

Body material	Polyamide
Tread Material Mix	Polyurethane, injected
Bearing	Precision ball bearing
Threadguards	With threadguard
Diameter	125 mm
Tread width	32 mm
Hardness of tread (D)	40 Shore D

FITTING

Fitting type	Synthetic expander, round
Expander fitting (Minimum)	21.5 mm
Expander fitting (Maximum)	24 mm
Hint	Please indicate required tube innerdiameter when ordering.

© Copyright 2026 TENTE International GmbH

AGILA

2477UAP125R07-Ø21,5-24

EAN 4031582327168

BETTER MOBILITY. BETTER LIFE.

Product Drawings

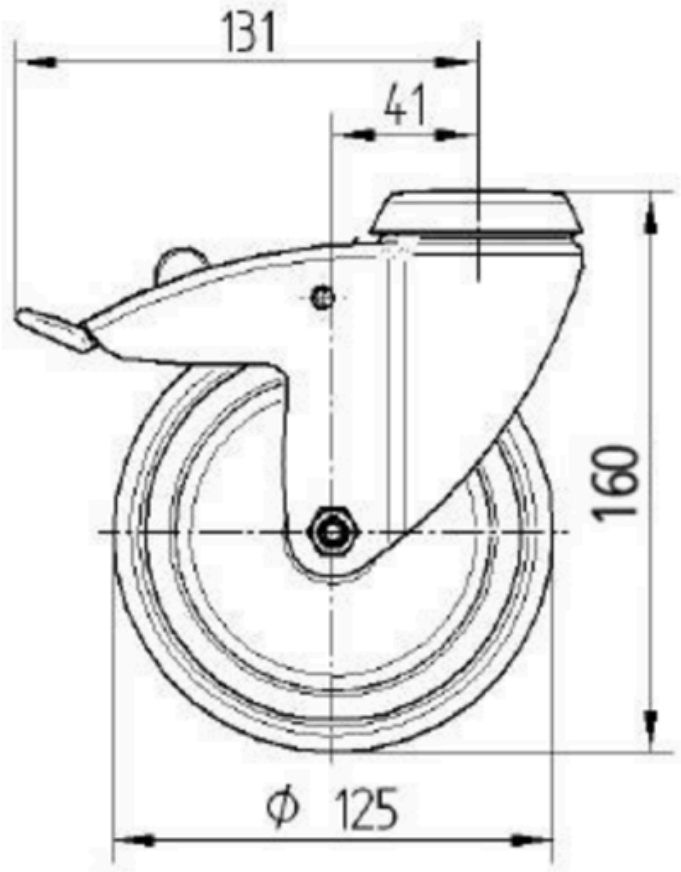

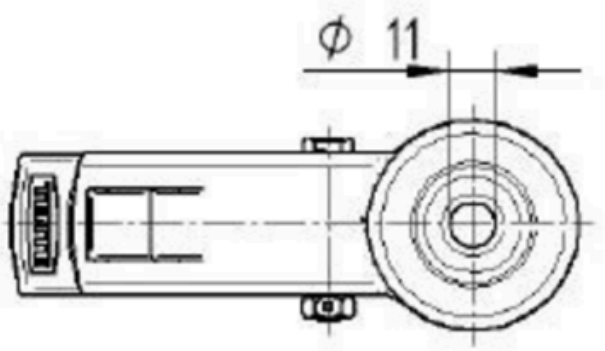

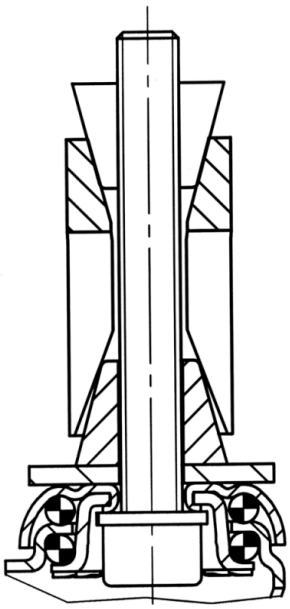

© Copyright 2026 TENTE International GmbH