PRODUCT INFORMATION

SUPRATECH

YGO125x30-Ø12 TFR

EAN 4031582482669



Image may differ from the original product

WHEEL

Body material	Polypropylene, electric conductive
Tread Material Mix	Thermoplastic rubber, electric-conductive
Bearing	Plain bearing
Threadguards	Without threadguard
Diameter	125 mm
Tread width	30 mm
Axle Hole Diameter	12 mm
Hub Length	34.9 mm
Hardness of tread (A)	87 Shore A

PERFORMANCE

Roll Performance	●●●○○
Movement Noise	●●●○○
Attrition	●●●○○
Corrosion Resistance	●●●○○

CORE ATTRIBUTES

Product Name	Supratech
Type	Wheel
Standard	EN12530 - Devices Castors
Load capacity at 3 km/h	100 kg
Electric Conductive	Yes
Stainless	No
Load capacity Static	200 kg
Temperature range (Minimum)	-20 °C
Temperature range (Maximum)	60 °C
Overall weight	0.24 kg

© Copyright 2026 TENTE International GmbH

SUPRATECH

YGO125x30-Ø12 TFR

EAN 4031582482669

BETTER MOBILITY. BETTER LIFE.

Product Drawings

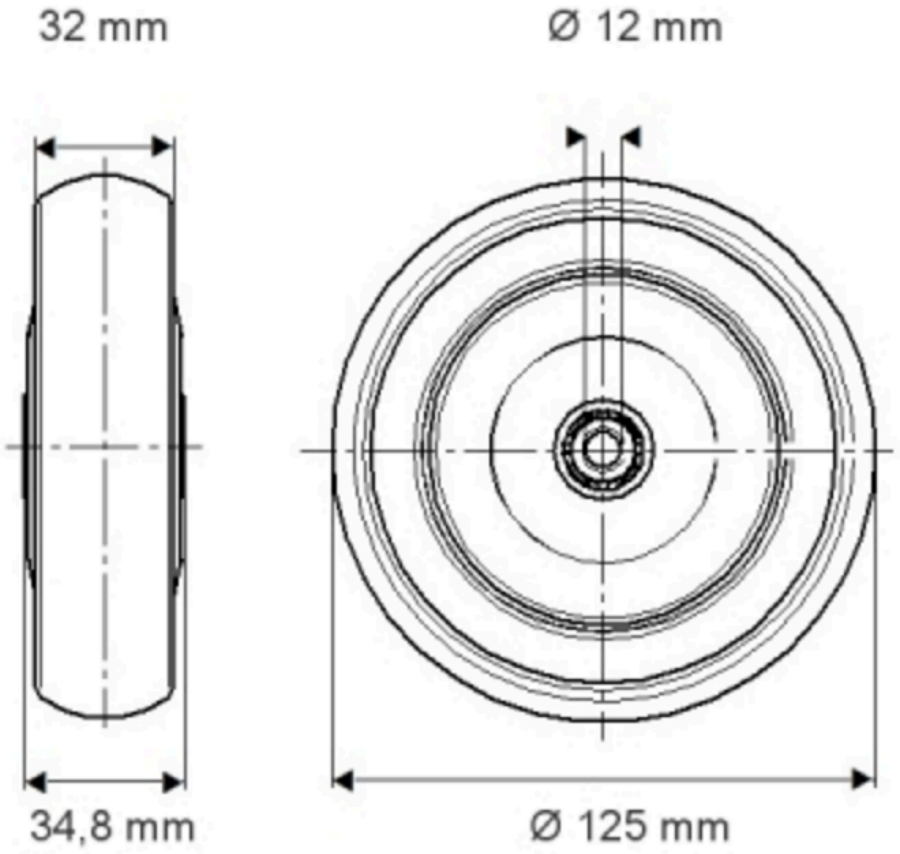

© Copyright 2026 TENTE International GmbH