PRODUCT INFORMATION

AGILA

2471UAP125R05-28 M8/19

EAN 4031582301502



Image may differ from the original product

PERFORMANCE

Roll Performance	●●●○○
Movement noise	●●●○○
Attrition	●●●●○
Corrosion resistance	●●●○○

CORE ATTRIBUTES

Product name	Agila
Type	Swivel caster with directional lock
Standard	EN12530 - Devices Castors
Load capacity at 1.8 mph	220.46 lb
Electric conductive	no
Stainless	no
Load capacity Static	440.92 lb
Temperature range (Minimum)	-13 °F
Temperature range (Maximum)	176 °F
Overall height	6.42 in
Overall width	2.36 in
Overall weight	2.74 lb

HOUSING

Housing Material	Steel sheet, medium
Fork shape	Broad
Swivel bearing	Two ball races
Housing Color	Blue passivated
Offset	1.61 in
Swivel radius	5.16 in
Swivel interference	10.31 in
Dome diameter	2.36 in

WHEEL

Body material	Polyamide
Tread material	Polyurethane, injected
Bearing	Precision ball bearing
Wheel color	Silver gray (RAL7001)
Threadguards	With threadguard
Diameter	4.92 in
Tread width	1.26 in
Body width	1.26 in
Hardness of tread (A)	92 Shore A
Hardness of tread (D)	42 Shore D

FITTING

Fitting type	Solid stem, round
Bolt diameter	1.1 in
Bolt length	1.77 in
Bolt thread position	0.75 in
Bolt mounting holes quantity	2

© Copyright 2026 TENTE International GmbH

AGILA

2471UAP125R05-28 M8/19

EAN 4031582301502

Order number 00030255

Product Drawings

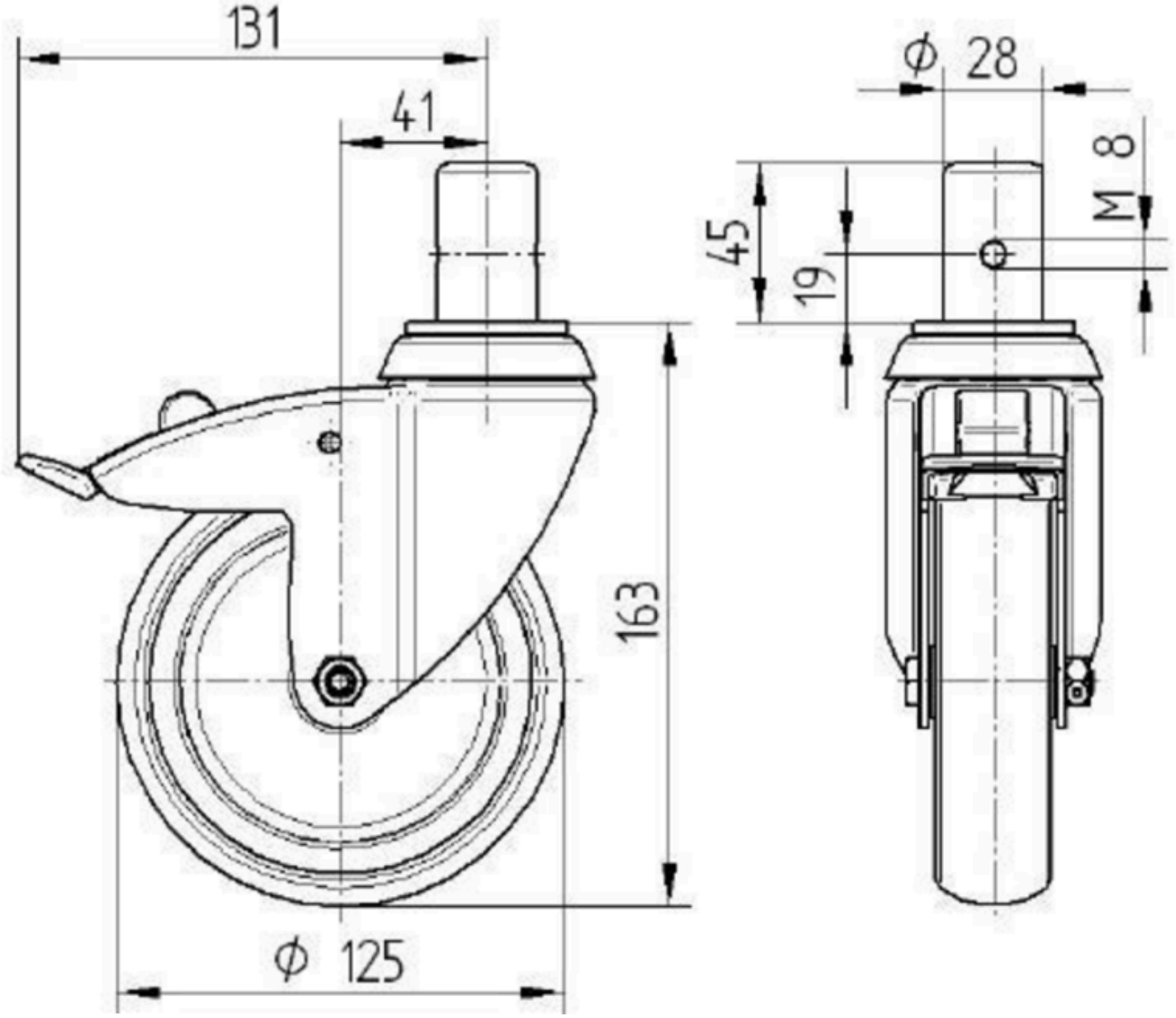

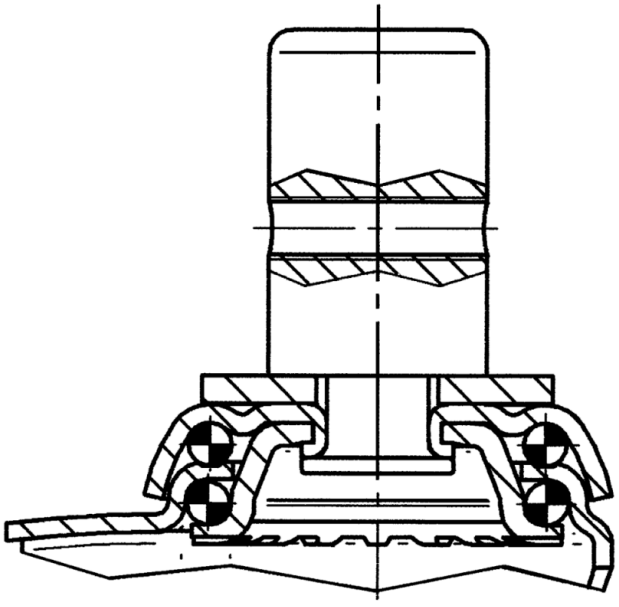

© Copyright 2026 TENTE International GmbH