PRODUCT INFORMATION

NOVATECH

ITP150x50-Ø20-SH80A convex

EAN 4031582329513



Image may differ from the original product

WHEEL

Tread profile	convex
Body material	Aluminum
Tread material	Polyurethane, casted
Bearing	Precision ball bearing
Threadguards	Without threadguard
Diameter	5.91 in
Tread width	1.97 in
Axle hole diameter	0.79 in
Hub length	2.36 in
Hardness of tread (A)	80 Shore A

PERFORMANCE

Roll Performance	●●●○○
Movement noise	●●●○○
Attrition	●●●●○
Corrosion resistance	●●●○○

CORE ATTRIBUTES

Product name	Novatech
Type	Wheel
Standard	EN12532 - Transport Equipment
Load capacity at 2.5 mph	1102.31 lb
Load capacity at 3.7 mph	881.85 lb
Electric conductive	no
Stainless	no
Load capacity Static	2204.62 lb
Temperature range (Minimum)	14 °F
Temperature range (Maximum)	140 °F

© Copyright 2026 TENTE International GmbH

NOVATECH

ITP150x50-Ø20-SH80A convex

EAN 4031582329513

BETTER MOBILITY. BETTER LIFE.

Product Drawings

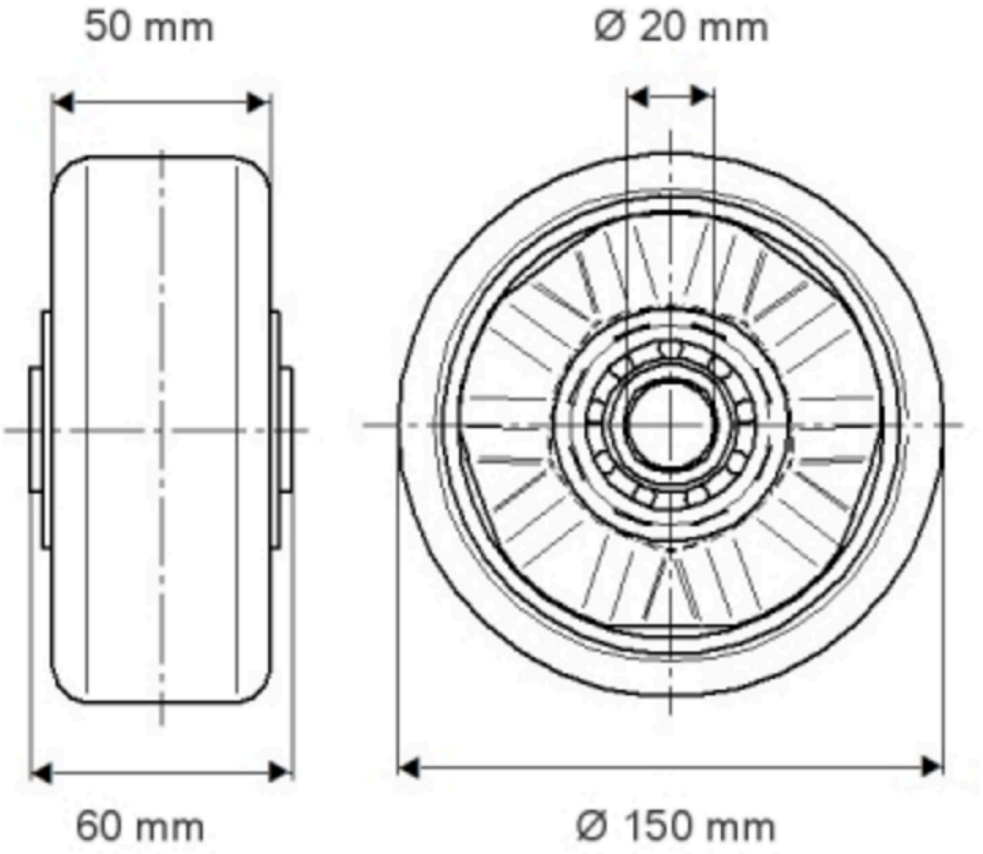

© Copyright 2026 TENTE International GmbH

NOVATECH

ITP150x50-Ø20-SH80A convex

EAN 4031582329513

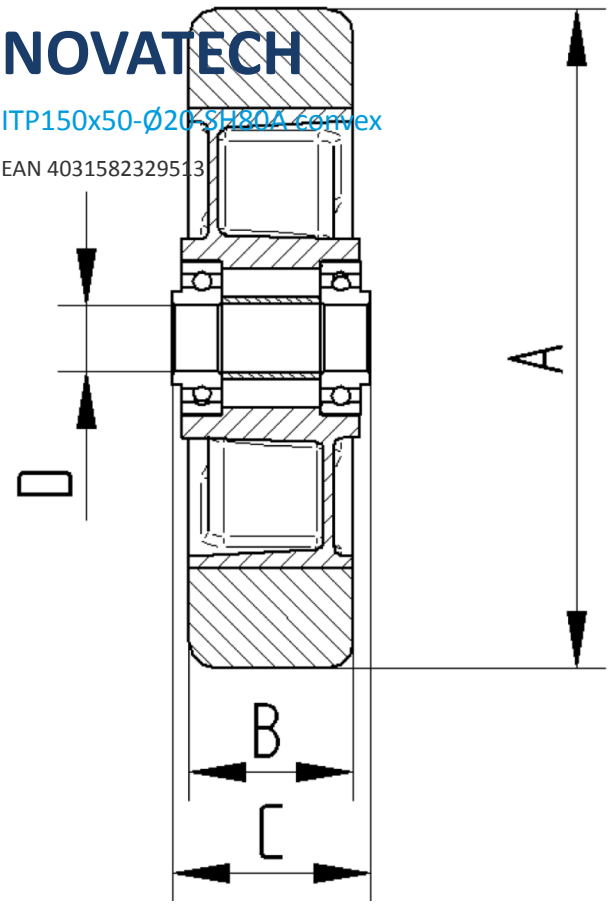

BETTER MOBILITY. BETTER LIFE.

© Copyright 2026 TENTE International GmbH