PRODUCT INFORMATION

ALPHA STAINLESS

8477UFC125P30-13

EAN 4031582422542

BETTER MOBILITY. BETTER LIFE.



Image may differ from the original product

PERFORMANCE

Roll Performance	●●●○○
Movement noise	●●●●●
Attrition	●●●○○
Corrosion resistance	●●●●●

CORE ATTRIBUTES

Product name	Alpha stainless
Type	Swivel caster with total lock
Standard	EN12532 - Transport Equipment
Load capacity at 2.5 mph	330.69 lb
Electric conductive	no
Stainless	Yes
Load capacity Static	661.39 lb
Temperature range (Minimum)	-4 °F
Temperature range (Maximum)	176 °F
Overall height	6.1 in
Overall weight	2.5 lb

HOUSING

Housing Material	Stainless steel, heavy
Fork shape	Broad
Swivel bearing	Two ball races
Housing Color	Stainless steel
Offset	1.57 in
Swivel interference	9.53 in

WHEEL

Tread hardness	soft
Body material	Polyamide
Tread material	Elastic tire, non-marking, vulcanized
Bearing	Precision ball bearing, stainless
Axle	Screwed with nut
Threadguards	With threadguard
Diameter	4.92 in
Tread width	1.57 in
Hardness of tread (A)	64 Shore A

FITTING

Fitting type	Bolt hole
Bolt hole diameter	0.51 in

© Copyright 2026 TENTE International GmbH

ALPHA STAINLESS

8477UFC125P30-13

EAN 4031582422542

BETTER MOBILITY. BETTER LIFE.

Product Drawings

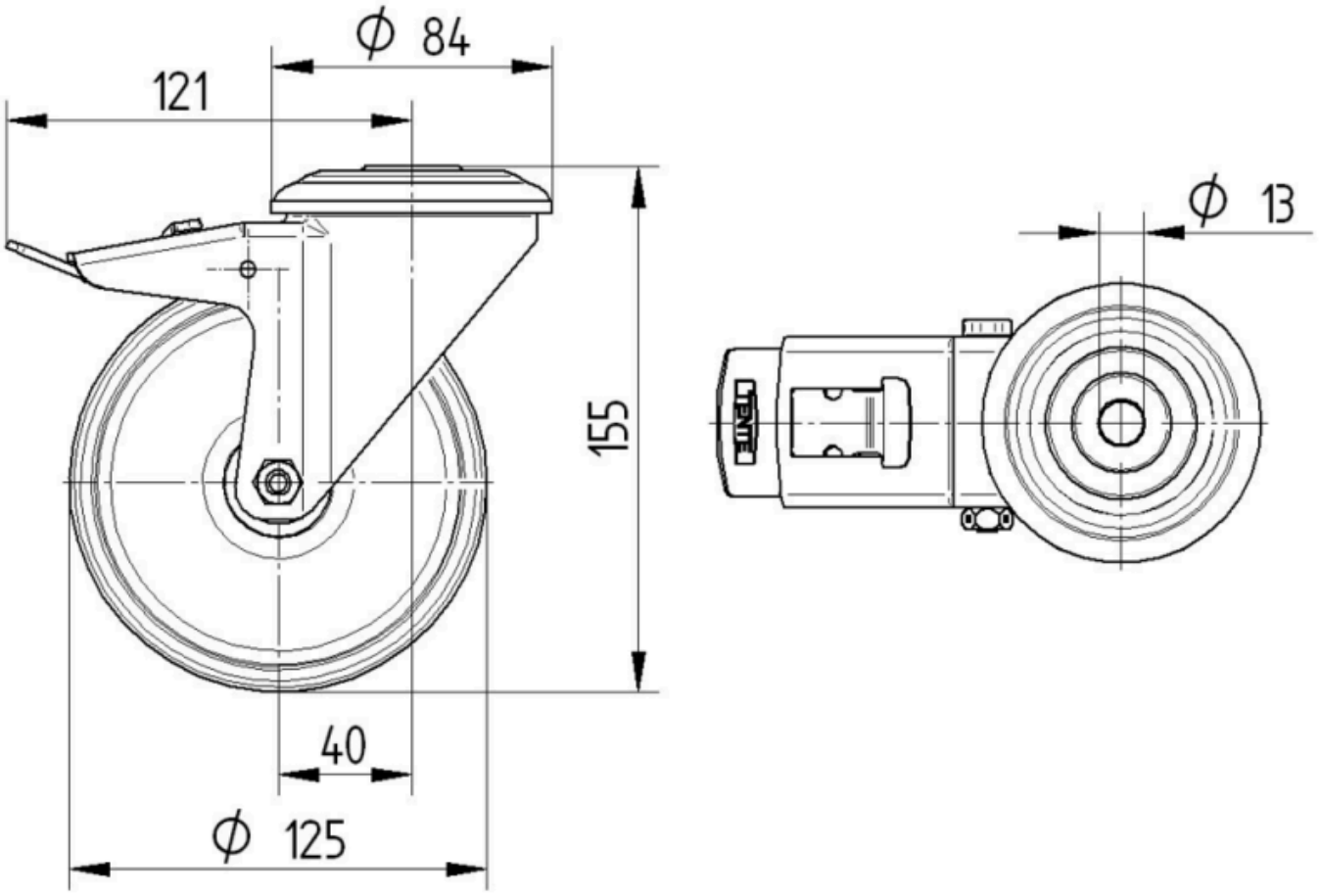

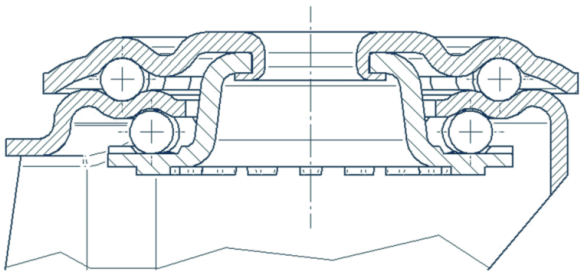

© Copyright 2026 TENTE International GmbH