PRODUCT INFORMATION

BASETECH

POR080x34-Ø12 RAL9011

EAN 4031582320763



Image may differ from the original product

WHEEL

Body material	Polypropylene
Tread Material Mix	Identical with wheel body
Bearing	Roller bearing
Threadguards	Without threadguard
Diameter	80 mm
Tread width	34 mm
Axle Hole Diameter	12 mm
Hub Length	44.4 mm
Hardness of tread (D)	65 Shore D

PERFORMANCE

Roll Performance	●●●○○
Movement Noise	●●●○○
Attrition	●●●●●
Corrosion Resistance	●●●○○

CORE ATTRIBUTES

Product Name	Basetech
Type	Wheel
Standard	EN12532 - Transport Equipment
Load capacity at 4 km/h	125 kg
Electric Conductive	No
Stainless	No
Load capacity Static	250 kg
Temperature range (Minimum)	-20 °C
Temperature range (Maximum)	60 °C
Overall weight	0.1 kg

© Copyright 2026 TENTE International GmbH

BASETECH

POR080x34-Ø12 RAL9011

EAN 4031582320763

Order number 00030950

Product Drawings

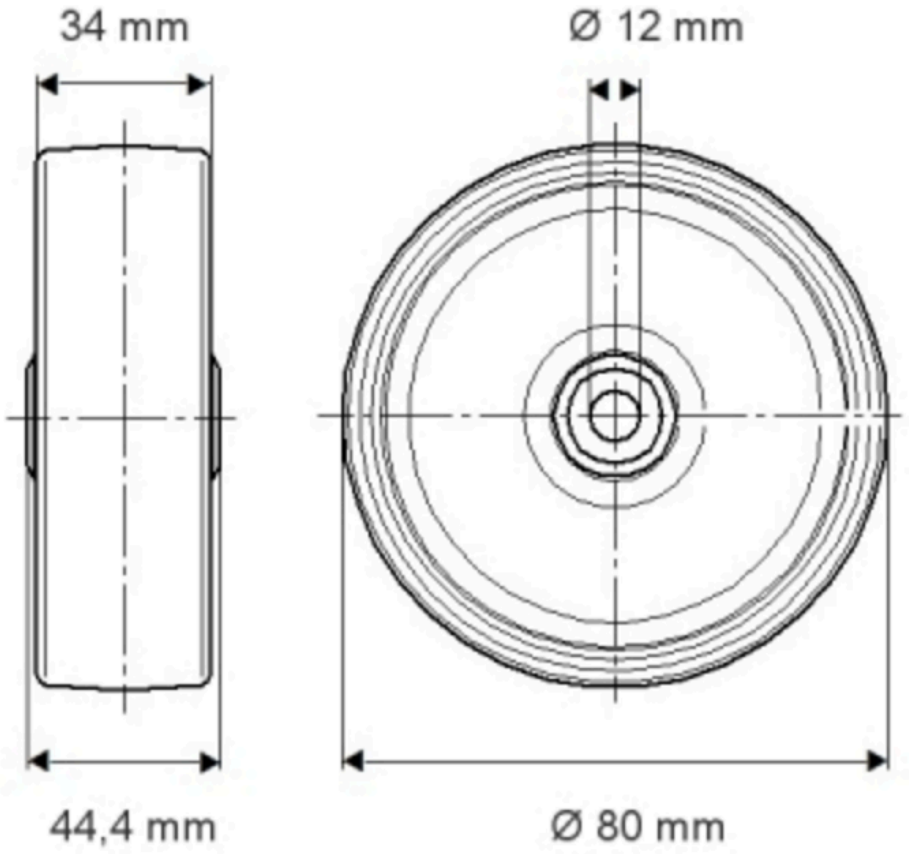

© Copyright 2026 TENTE International GmbH