PRODUCT INFORMATION

SUPRATECH

PJP 050x18-Ø6,2 HL22

EAN 4031582409130

BETTER MOBILITY. BETTER LIFE.



Image may differ from the original product

WHEEL

Body material	Polypropylene
Tread material	Thermoplastic rubber
Bearing	Precision ball bearing
Wheel color	Silver gray (RAL7001)
Threadguards	With threadguard
Diameter	1.97 in
Tread width	0.71 in
Axle hole diameter	0.24 in
Hub length	0.87 in
Body width	0.71 in
Hardness of tread (A)	87 Shore A

PERFORMANCE

Roll Performance	●●●○○
Movement noise	●●●○○
Attrition	●●●○○
Corrosion resistance	●●●○○

CORE ATTRIBUTES

Product name	Supratech
Type	Wheel
Standard	EN12530 - Devices Castors
Load capacity at 1.8 mph	88.18 lb
Electric conductive	no
Stainless	no
Load capacity Static	176.37 lb
Temperature range (Minimum)	-40 °F
Temperature range (Maximum)	176 °F
Overall weight	0.1 lb

© Copyright 2026 TENTE International GmbH

SUPRATECH

PJP 050x18-Ø6,2 HL22

EAN 4031582409130

Order number 00061242

Product Drawings

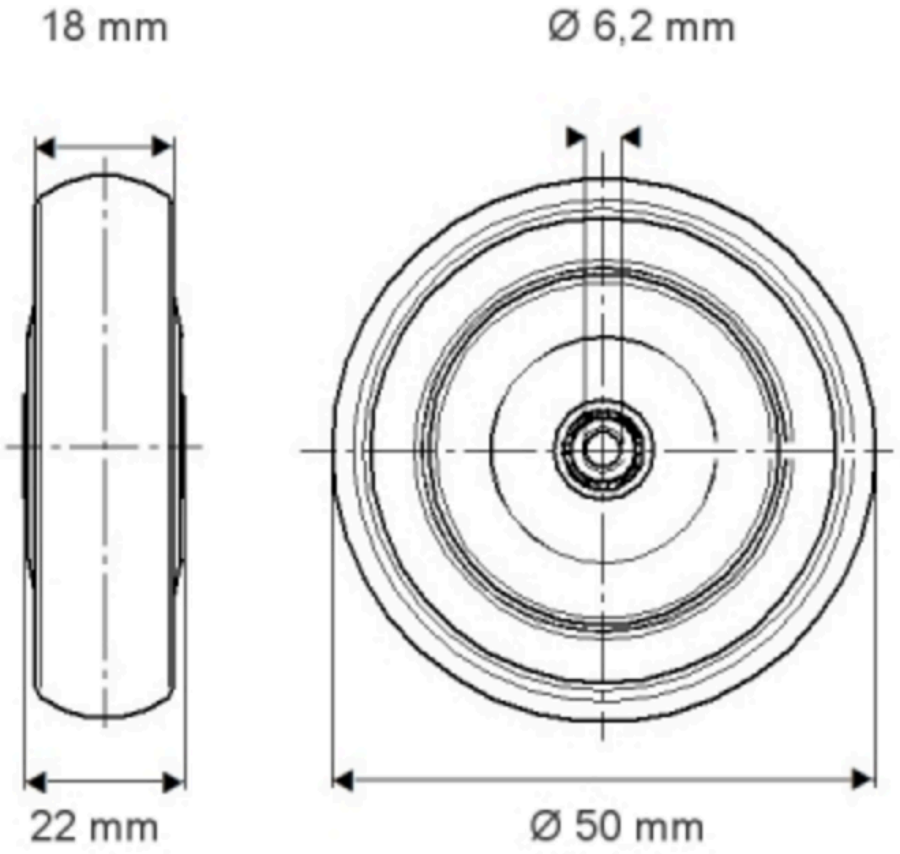

© Copyright 2026 TENTE International GmbH