PRODUCT INFORMATION

ELASTECH

UFC200X46@12X60

EAN 4031582422320

BETTER MOBILITY. BETTER LIFE.



Image may differ from the original product

WHEEL

Tread hardness	soft
Body material	Polyamide
Tread Material Mix	Elastic tire, non-marking, vulcanized
Bearing	Precision ball bearing, stainless
Threadguards	With threadguard
Diameter	200 mm
Tread width	46 mm
Axle Hole Diameter	12 mm
Hub Length	60 mm
Hardness of tread (A)	64 Shore A

PERFORMANCE

Roll Performance	●●●○○
Movement Noise	●●●●●
Attrition	●●●○○
Corrosion Resistance	●●●○○

CORE ATTRIBUTES

Product Name	Elastech
Type	Wheel
Standard	EN12532 - Transport Equipment
Load capacity at 4 km/h	400 kg
Electric Conductive	No
Stainless	Yes
Load capacity Static	800 kg
Temperature range (Minimum)	-20 °C
Temperature range (Maximum)	80 °C
Overall weight	1.33 kg

© Copyright 2026 TENTE International GmbH

ELASTECH

UFC200X46@12X60

EAN 4031582422320

BETTER MOBILITY. BETTER LIFE.

Product Drawings

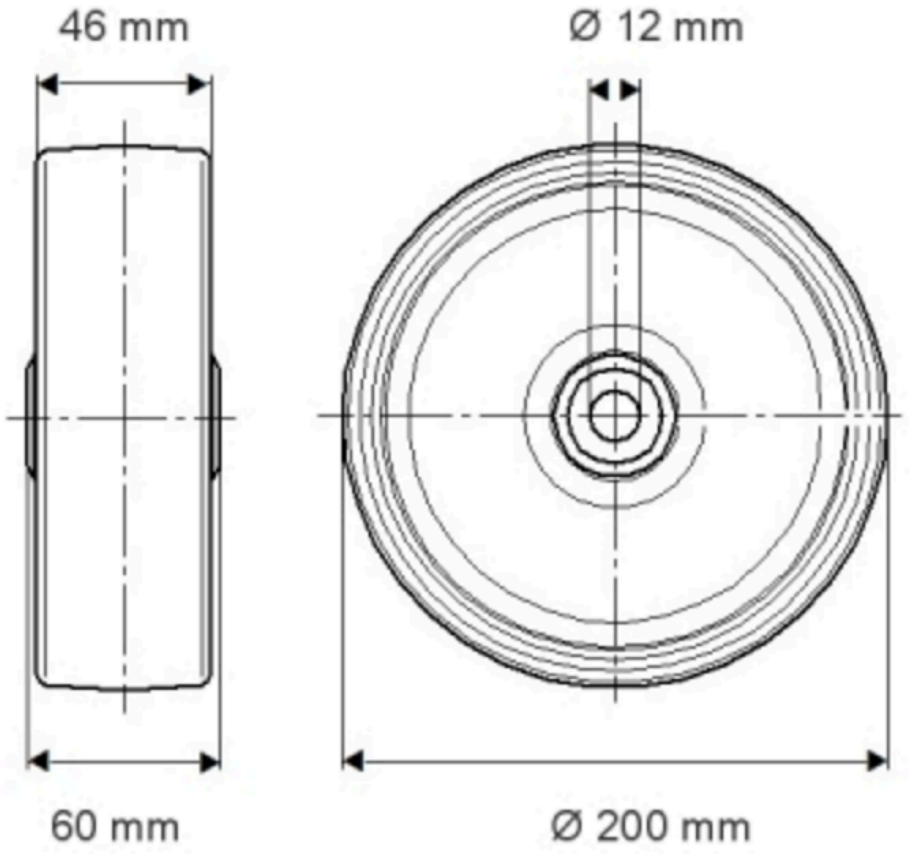

© Copyright 2026 TENTE International GmbH