PRODUCT INFORMATION

INTEGRAL TWIN

2946UAP150R26-28S45 D 9002 4xM8

EAN 4031582302622



Image may differ from the original product

PERFORMANCE

Roll Performance	●●●●●
Movement Noise	●●●○○
Attrition	●●●●○
Corrosion Resistance	●●●○○

CORE ATTRIBUTES

Product Name	Integral twin
Type	Swivel castor with central, total lock
Standard	EN12531 - Hospital Bed Castors
Load capacity at 3 km/h	150 kg
Load capacity at 4 km/h	150 kg
Electric Conductive	No
Stainless	No
Load capacity Static	450 kg
Temperature range (Minimum)	-25 °C
Temperature range (Maximum)	80 °C
Overall Height	175 mm
Overall width	75 mm
Overall weight	1.42 kg
Certification	Tested and monitored by TÜV Süd

HOUSING

Housing Material	Steel sheet, medium
Fork shape	Twin wheel housing
Swivel Bearing	Precision ball bearing
Housing Color	Grey white (RAL9002)
Offset	45 mm
Swivel radius	124 mm
Swivel interference	248 mm
Dome diameter	70 mm

WHEEL

Body material	Polyamide
Tread Material Mix	Polyurethane, injected
Bearing	Precision ball bearing
Wheel Color	Grey white (RAL9002)
Threadguards	With threadguard
Diameter	150 mm
Tread width	15 mm
Body width	15 mm
Hardness of tread (A)	92 Shore A
Hardness of tread (D)	42 Shore D

FITTING

Brake cam	hex cam
Fitting type	Stem with cam hole for profile bars
Bolt diameter	28 mm
Bolt length	96 mm
Bolt thread position	19 mm
Bolt mounting holes quantity	4

German Design Award

Red Dot Design Award

© Copyright 2026 TENTE International GmbH

INTEGRAL TWIN

2946UAP150R26-28S45 D 9002 4xM8

EAN 4031582302622

Order number 00035803

Product Drawings

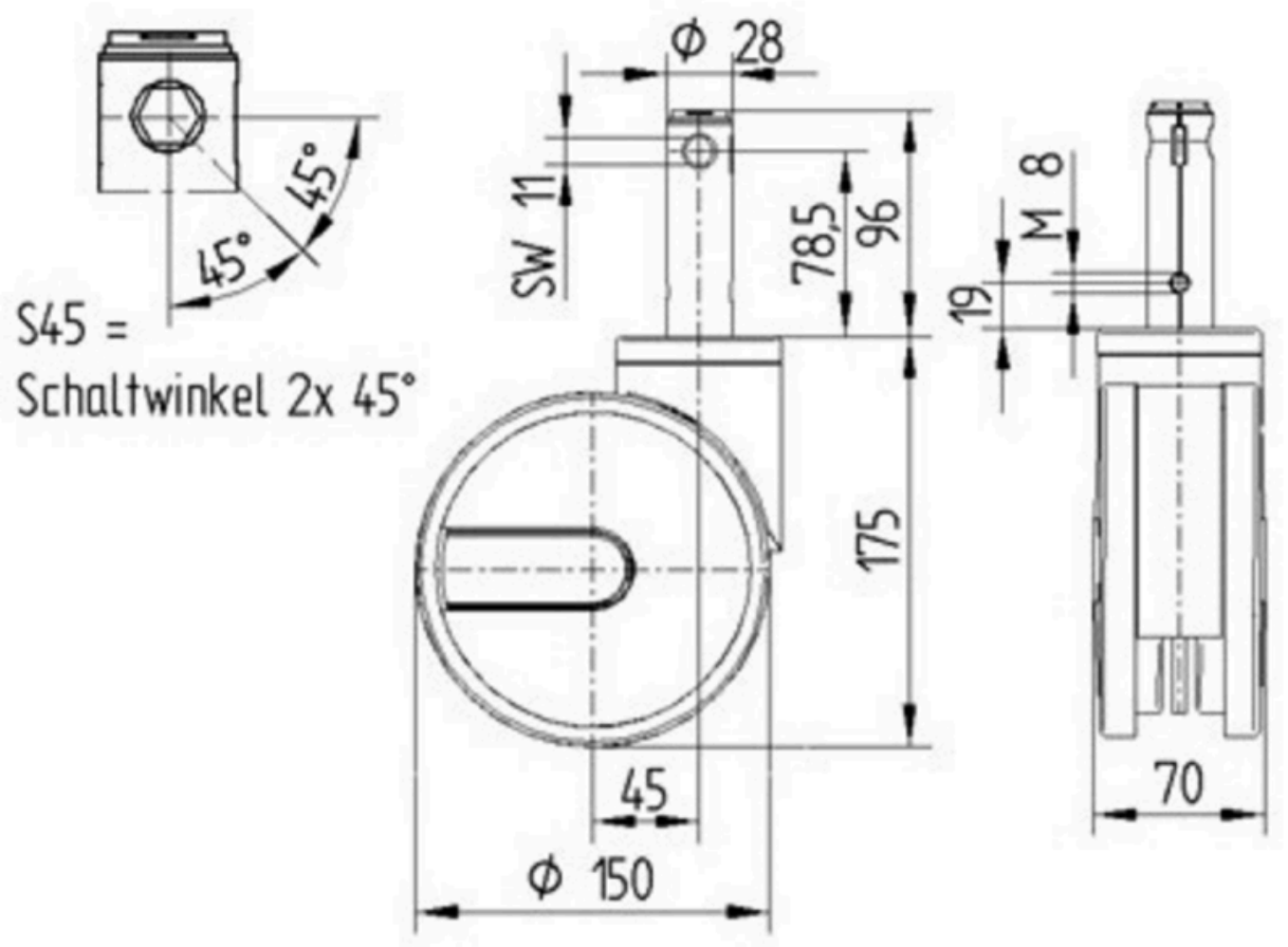

German Design Award

Red Dot Design Award

© Copyright 2026 TENTE International GmbH