PRODUCT INFORMATION

PURETECH AIR

PPO400x100-Ø25 HL74 4PR TFR

EAN 4031582400311



Image may differ from the original product

WHEEL

Tread hardness	soft
Body material	Polypropylene
Tread Material Mix	Pneumatic tyre, line profile
Bearing	Plain bearing
Threadguards	Without threadguard
Diameter	400 mm
Tread width	100 mm
Axle Hole Diameter	25 mm
Hub Length	74 mm
Hardness of tread (A)	55 Shore A

PERFORMANCE

Roll Performance	● ● ● ○ ○
Movement Noise	● ● ● ○ ○
Attrition	● ● ● ○ ○
Corrosion Resistance	● ● ● ○ ○

CORE ATTRIBUTES

Product Name	Puretech air
Type	Wheel
Load capacity at 3 km/h	140 kg
Electric Conductive	No
Stainless	No
Load capacity Static	280 kg
Overall weight	1.89 kg

© Copyright 2026 TENTE International GmbH

PURETECH AIR

PPO400x100-Ø25 HL74 4PR TFR

EAN 4031582400311

BETTER MOBILITY. BETTER LIFE.

Product Drawings

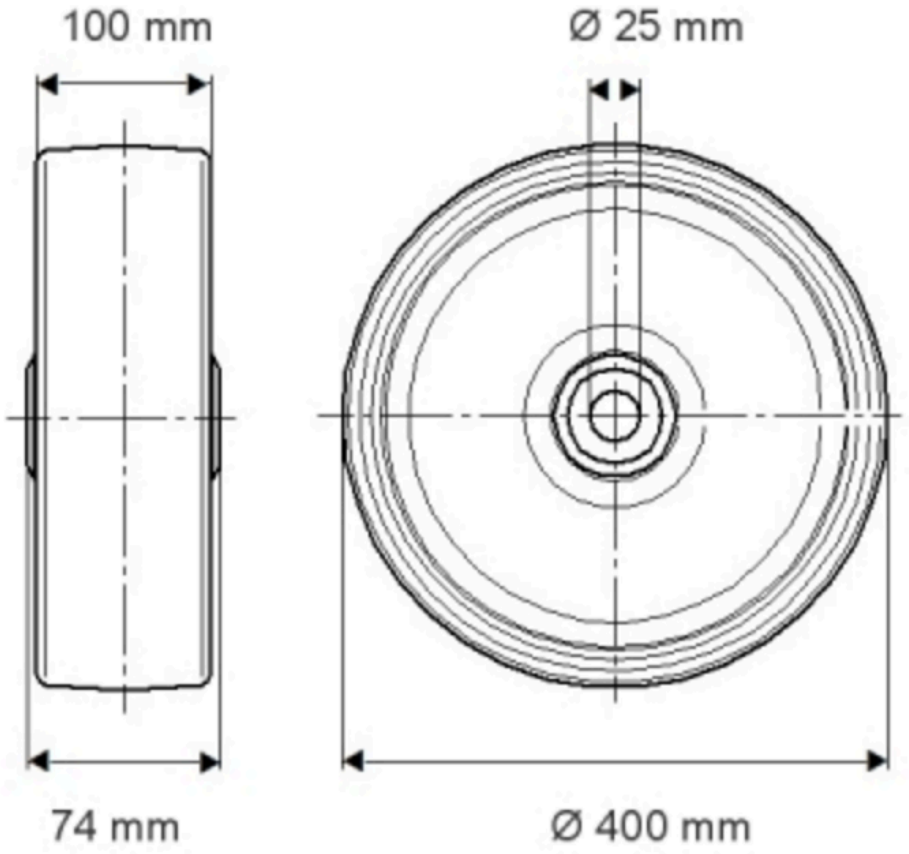

© Copyright 2026 TENTE International GmbH