PRODUCT INFORMATION

LINEA LIGHT

5925UAP075L51-10 RAL7001 RAL7015-std-brake-lever English

EAN 4031582453928

BETTER MOBILITY. BETTER LIFE.



Image may differ from the original product

PERFORMANCE

Roll Performance	●●●○○
Movement Noise	●●●○○
Attrition	●●●○○
Corrosion Resistance	●●●●○

CORE ATTRIBUTES

Product Name	Linea light
Type	Swivel castor with wheel brake
Standard	EN12528 - Furniture Castors
Load capacity at 3 km/h	100 kg
Electric Conductive	No
Stainless	No
Load capacity Static	200 kg
Temperature range (Minimum)	-10 °C
Temperature range (Maximum)	40 °C
Overall Height	75.5 mm
Overall width	55 mm
Overall weight	0.2 kg

HOUSING

Housing Material	Polyamide
Fork shape	Twin wheel housing
Swivel Bearing	Stem, swiveling
Housing Color	Silver grey (RAL7001)
Offset	23 mm
Swivel radius	81 mm
Swivel interference	162 mm
Dome diameter	30 mm

WHEEL

Body material	Polyamide
Tread Material Mix	Polyurethane, injected
Bearing	Precision ball bearing
Threadguards	With threadguard
Diameter	75 mm
Tread width	15 mm

FITTING

Fitting type	Blind hole for B10
Bolt hole diameter	10 mm

Deutscher Designer Club

Interzum Award

IF Design Award

© Copyright 2026 TENTE International GmbH

LINEA LIGHT

5925UAP075L51-10 RAL7001 RAL7015-std-brake-lever English

EAN 4031582453928

BETTER MOBILITY. BETTER LIFE.

Product Drawings

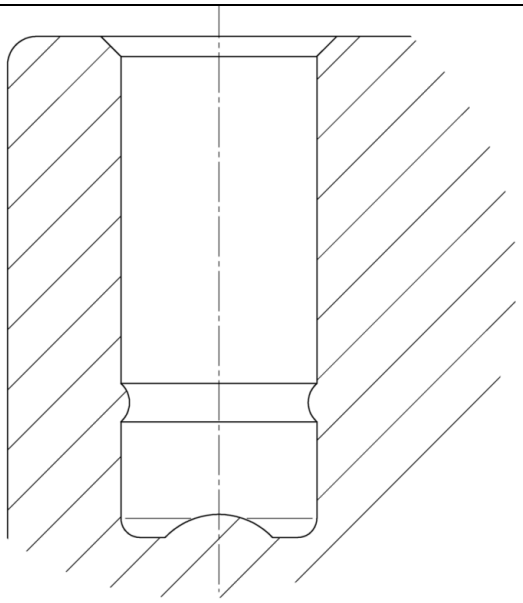

Deutscher Designer Club

Interzum Award

IF Design Award

© Copyright 2026 TENTE International GmbH