PRODUCT INFORMATION

ALPHA

3477PIO160P63

EAN 4031582305289
Order number 00029972

BETTER MOBILITY. BETTER LIFE.

Image may differ from the original product

PERFORMANCE

Roll performance	●●●○○
Movement noise	●●●○○
Attrition	●●●○○
Corrosion resistance	●●●○○

CORE ATTRIBUTES

Product name	Alpha
Type	Swivel castor with total lock
Standard	EN12532 - Transport Equipment
Load capacity at 2.5 mph	297.62 lb
Load capacity Static	595.25 lb
Temperature range (Minimum)	-4 °F
Temperature range (Maximum)	140 °F
Overall height	7.87 in
Overall weight	5.35 lb

WHEEL

Body material	Polypropylene
Tread material	Solid rubber, non-marking
Bearing	Plain bearing
Axle	Screwed with nut
Threadguards	Without threadguard
Diameter	6.3 in
Tread width	1.57 in
Hardness of tread (A)	80 Shore A

HOUSING

Material	Steel sheet, heavy
Fork shape	Broad
Swivel bearing	Two ball races
Offset	2.36 in
Swivel radius	6.57 in
Swivel interference	13.15 in

FITTING

Fitting type	Rectangular plate
Plate length	5.39 in
Plate width	4.13 in
Plate hole length (Maximum)	4.13 in
Plate hole width (Minimum)	2.95 in
Plate hole width (Maximum)	3.15 in
Plate hole diameter	0.43 in

© Copyright 2026 TENTE International GmbH

ALPHA

3477PIO160P63

EAN 4031582305289
Order number 00029972

BETTER MOBILITY. BETTER LIFE.
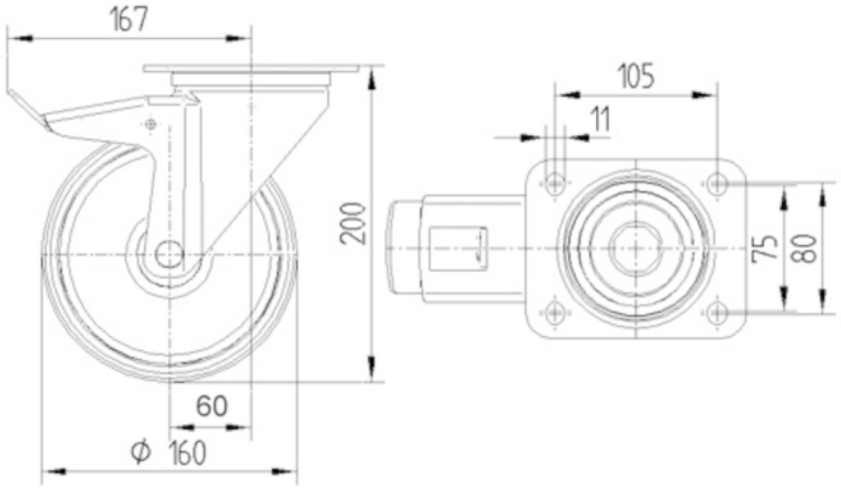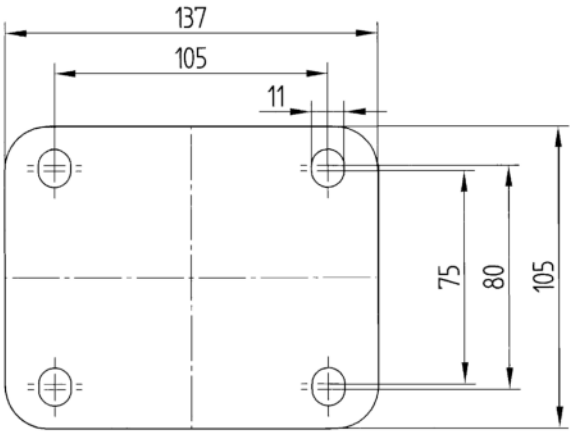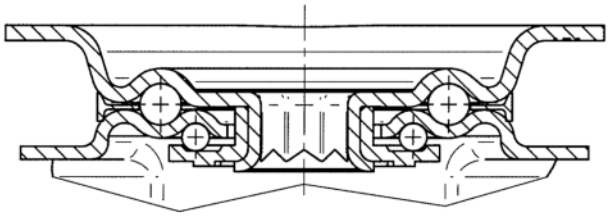
TECHNICAL DRAWINGS