PRODUCT INFORMATION

GALEA

5071YGH125P60-90x70

EAN 4031582353440

BETTER MOBILITY. BETTER LIFE.



Image may differ from the original product

PERFORMANCE

Roll Performance	●●●○○
Movement noise	●●●○○
Attrition	●●●○○
Corrosion resistance	●●●●○

CORE ATTRIBUTES

Product name	Galea
Type	Swivel caster with directional lock
Standard	EN12530 - Devices Castors
Load capacity at 1.8 mph	220.46 lb
Electric conductive	Yes
Stainless	no
Load capacity Static	440.92 lb
Temperature range (Minimum)	-4 °F
Temperature range (Maximum)	140 °F
Overall height	6.42 in
Overall weight	1.23 lb

HOUSING

Housing Material	Polyamide
Fork shape	Closed
Swivel bearing	Two ball races
Offset	1.57 in
Swivel interference	8.07 in

WHEEL

Body material	Polypropylene, electric conductive
Tread material	Thermoplastic rubber, electric-conductive
Bearing	Plain bearing
Threadguards	With threadguard
Diameter	4.92 in
Tread width	1.18 in
Hardness of tread (A)	87 Shore A

FITTING

Fitting type	Rectangular plate
Plate length	3.54 in
Plate width	2.76 in
Plate hole length (Minimum)	2.36 in
Plate hole length (Maximum)	2.76 in
Plate hole width (Minimum)	1.97 in
Plate hole width (Maximum)	2.17 in
Plate hole diameter	0.31 in

© Copyright 2026 TENTE International GmbH

GALEA

5071YGH125P60-90x70

EAN 4031582353440

BETTER MOBILITY. BETTER LIFE.

Product Drawings

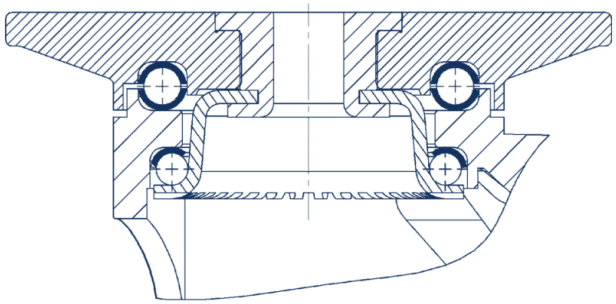

© Copyright 2026 TENTE International GmbH