PRODUCT INFORMATION

BASETECH

POR 108x36-Ø12 HL44,4

EAN 4031582320794

BETTER MOBILITY. BETTER LIFE.



Image may differ from the original product

WHEEL

Body material	Polypropylene
Tread Material Mix	Identical with wheel body
Bearing	Roller bearing
Wheel Color	Graphite black (RAL9011)
Threadguards	Without threadguard
Diameter	108 mm
Tread width	36 mm
Axle Hole Diameter	12 mm
Hub Length	44.4 mm
Body width	36 mm
Hardness of tread (D)	65 Shore D

PERFORMANCE

Roll Performance	●●●○○
Movement Noise	●●●○○
Attrition	●●●●○
Corrosion Resistance	●●●○○

CORE ATTRIBUTES

Product Name	Basetech
Type	Wheel
Standard	EN12532 - Transport Equipment
Load capacity at 4 km/h	160 kg
Electric Conductive	No
Stainless	No
Load capacity Static	320 kg
Temperature range (Minimum)	-20 °C
Temperature range (Maximum)	60 °C
Overall weight	0.15 kg

© Copyright 2026 TENTE International GmbH

BASETECH

POR 108x36-Ø12 HL44,4

EAN 4031582320794

Order number 00030953

Product Drawings

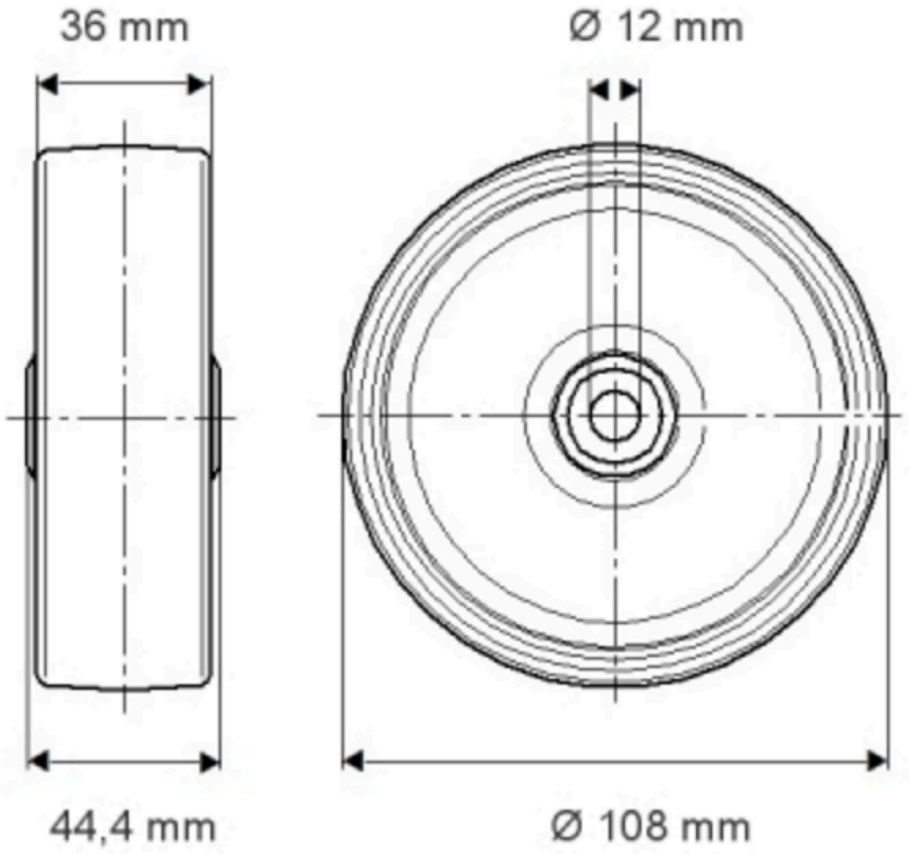

© Copyright 2026 TENTE International GmbH