PRODUCT INFORMATION

ZETA REVERSE

468BTOO125P63 180°

EAN 4031582398205



Image may differ from the original product

PERFORMANCE

Roll Performance	●●●●○
Movement Noise	●○○○○
Attrition	●●●●●
Corrosion Resistance	●●●○○

CORE ATTRIBUTES

Product Name	Zeta reverse
Type	Swivel castor with total lock and spring loaded directional lock
Standard	EN12532 - Transport Equipment
Load capacity at 4 km/h	700 kg
Load capacity at 6 km/h	560 kg
Electric Conductive	No
Stainless	No
Load capacity Static	1400 kg
Temperature range (Minimum)	-40 °C
Temperature range (Maximum)	80 °C
Overall Height	164 mm
Overall weight	2.85 kg

HOUSING

Housing Material	Steel sheet, very heavy
Fork shape	Broad, reinforced
Swivel Bearing	Two ball races, reinforced or stainless
Housing Color	Blue passivated
Offset	60 mm
Swivel interference	360 mm

WHEEL

Body material	Polyamide, heavy
Tread Material Mix	Identical with wheel body
Bearing	Plain bearing
Axle	Screwed with nut
Threadguards	Without threadguard
Diameter	125 mm
Tread width	50 mm
Hardness of tread (D)	75 Shore D

FITTING

Fitting type	Medium rectangular plate
Plate length	137 mm
Plate width	105 mm
Plate hole length (Maximum)	105 mm
Plate hole width (Minimum)	75 mm
Plate hole width (Maximum)	80 mm
Plate hole diameter	11 mm

© Copyright 2026 TENTE International GmbH

ZETA REVERSE

468BTOO125P63 180°

EAN 4031582398205

Order number 00860931

Product Drawings

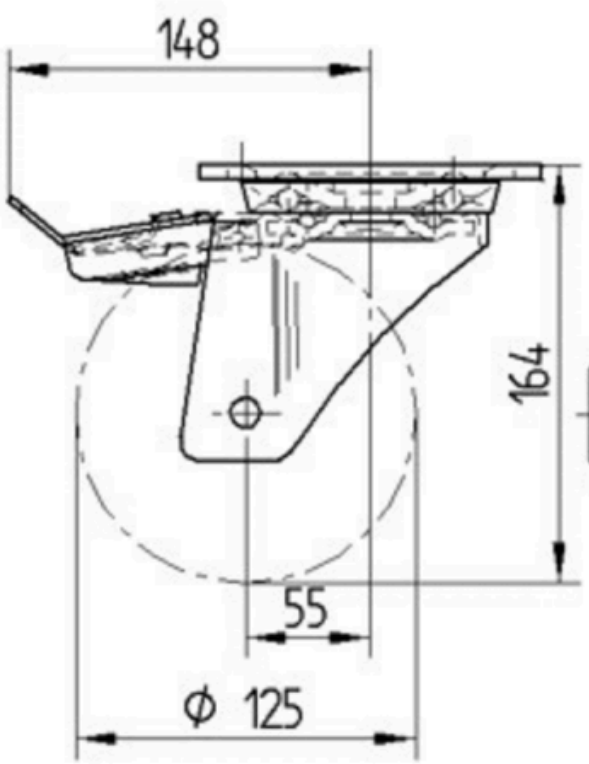

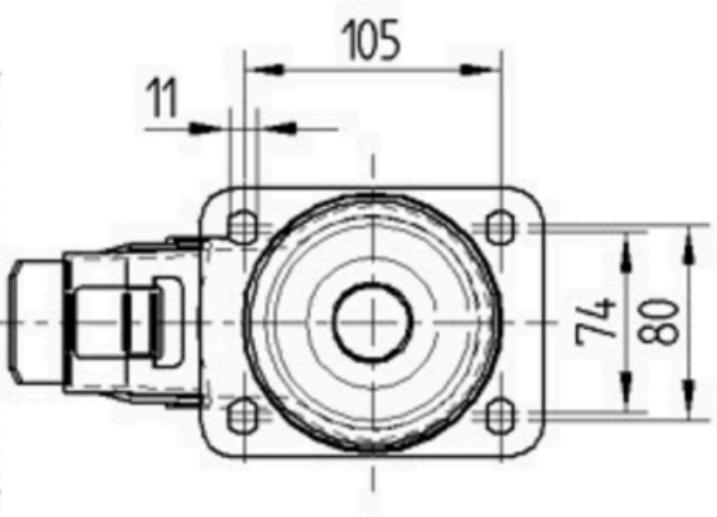

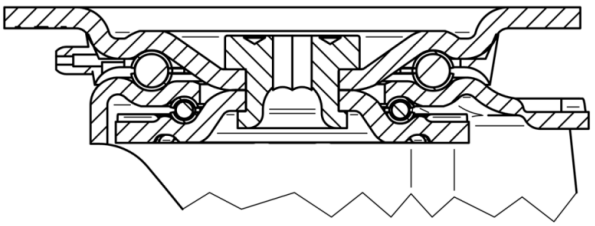

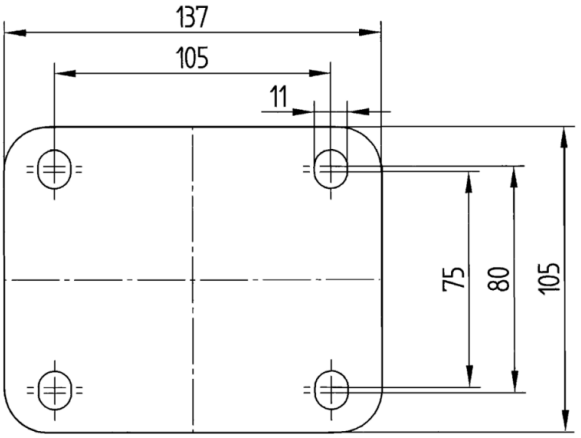

© Copyright 2026 TENTE International GmbH