PRODUCT INFORMATION

INTEGRAL

2046XSX150R26-28S45 D 9002 4xM8 W

EAN 4031582341454



Image may differ from the original product

PERFORMANCE

Roll Performance	●●●○○
Movement noise	●●●○○
Attrition	●●●●○
Corrosion resistance	●●●○○

CORE ATTRIBUTES

Product name	Integral
CO2 emission (scope 3)	6.45
Type	Swivel caster with central , total lock
Standard	EN12531 - Hospital Bed Castors
Load capacity at 1.8 mph	330.69 lb
Load capacity at 2.5 mph	330.69 lb
Electric conductive	Yes
Stainless	no
Load capacity Static	992.08 lb
Temperature range (Minimum)	-13 °F
Temperature range (Maximum)	176 °F
Overall height	7.2 in
Overall width	2.44 in
Overall weight	2.24 lb
Certification	Tested and monitored by TÜV Süd

HOUSING

Housing Material	Steel sheet, medium
Fork shape	Closed
Swivel bearing	Precision ball bearing
Housing Color	Gray white (RAL9002)
Offset	1.57 in
Swivel radius	4.53 in
Swivel interference	9.06 in
Dome diameter	2.44 in

WHEEL

Body material	Polyamide, electric conductive
Tread material	Polyurethane, injected, electric-conductive
Bearing	Precision ball bearing, sealed
Tread color	Slate gray (similar RAL7015)
Wheel color	Slate gray (RAL7015)
Threadguards	Integrated threadguard
Diameter	5.91 in
Tread width	1.26 in
Body width	1.26 in
Hardness of tread (A)	91 Shore A
Hardness of tread (D)	40 Shore D

FITTING

Brake cam	Hex cam
Fitting type	Stem with cam hole for profile bars
Bolt diameter	1.1 in
Bolt length	3.78 in
Bolt thread position	0.75 in
Bolt mounting holes quantity	4
Hint	Washable beds must be sealed in the fitting area by the hospital bed manufacturer.

IF Design Award

Red Dot Design Award

© Copyright 2026 TENTE International GmbH

INTEGRAL

2046XSX150R26-28S45 D 9002 4xM8 W

EAN 4031582341454

Order number 00030608

Product Drawings

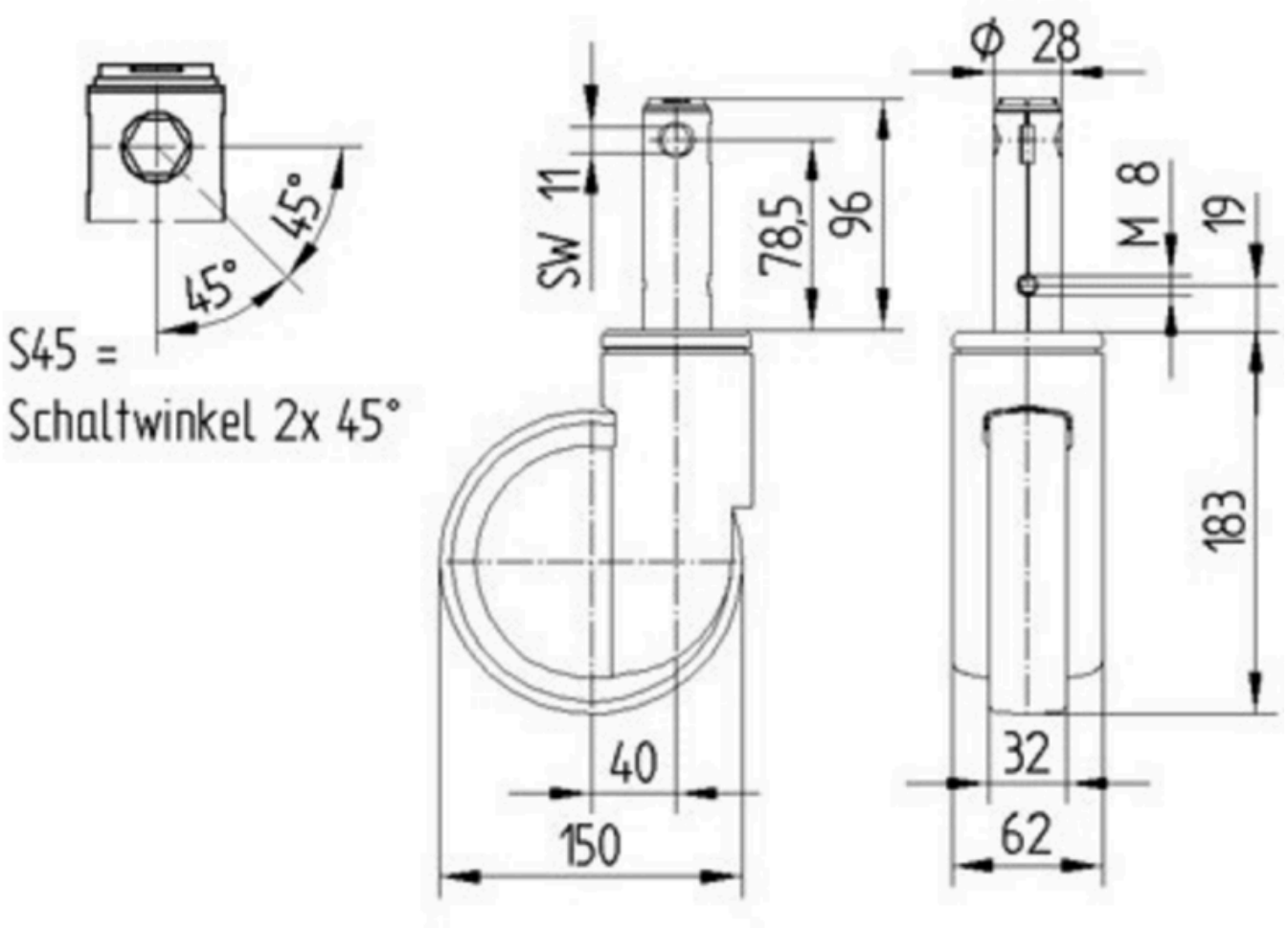

IF Design Award

Red Dot Design Award

© Copyright 2026 TENTE International GmbH