PRODUCT INFORMATION

LUMINA

AA20POI050S70-10X15/8 9011/9011

EAN 4031582415094

BETTER MOBILITY. BETTER LIFE.

Image may differ from the original product

PERFORMANCE

Roll performance	●●●○○
Movement noise	●●●○○
Attrition	●●●○○
Corrosion resistance	●●●○○

CORE ATTRIBUTES

Product name	Lumina
Type	Swivel castor
Standard	EN12528 - Furniture Castors
Load capacity at 1.8 mph	88.18 lb
Load capacity Static	176.37 lb
Temperature range (Minimum)	-4 °F
Temperature range (Maximum)	140 °F
Overall height	2.2 in
Overall width	2.17 in
Overall weight	0.29 lb

WHEEL

Body material	Polypropylene
Tread material	Identical with wheel body
Bearing	Plain bearing with spacer tube
Axle	Riveted
Tread color	Graphite black (RAL9011)
Wheel color	Graphite black (RAL9011)
Threadguards	Without threadguard
Diameter	1.97 in
Tread width	0.28 in
Axle hole diameter	0 in
Hub length	0 in
Body width	0.28 in
Hardness of tread (D)	65 Shore D

HOUSING

Material	Polypropylene
Fork shape	Twin wheel housing, closed
Swivel bearing	Stem, swiveling
Color	Graphite black (RAL9011)
Offset	0.79 in
Swivel radius	2.05 in
Swivel interference	4.09 in
Dome diameter	0 in
Thread diameter	0.39 in

FITTING

Fitting type	Threaded stem with hexagon neck, top
Stem diameter	0.39 in
Stem length	0.59 in

© Copyright 2026 TENTE International GmbH

LUMINA

AA20POI050S70-10X15/8 9011/9011

EAN 4031582415094

BETTER MOBILITY. BETTER LIFE.
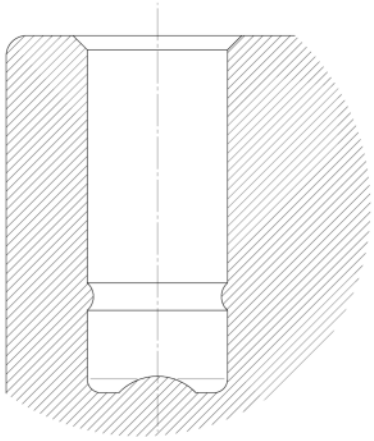
TECHNICAL DRAWINGS