PRODUCT INFORMATION

DURATECH HEAT

BOG080x35-Ø8 TFR

EAN 4031582392944



Image may differ from the original product

PERFORMANCE

Roll Performance	●●●○○
Movement Noise	●●●○○
Attrition	●●●●●
Corrosion Resistance	●●●●●

CORE ATTRIBUTES

Product Name	Duratech heat
Type	Wheel
Standard	EN12532 - Transport Equipment
Load capacity at 4 km/h	100 kg
Electric Conductive	No
Stainless	No
Load capacity Static	200 kg
Temperature range (Minimum)	-40 °C
Temperature range (Maximum)	280 °C
Overall weight	0.18 kg

WHEEL

Body material	Plastic thermoset, heat-resistant
Tread Material Mix	Identical with wheel body
Bearing	Dry bearing bush
Diameter	80 mm
Tread width	35 mm
Axle Hole Diameter	8 mm
Hub Length	45 mm
Hardness of tread (D)	85 Shore D

© Copyright 2026 TENTE International GmbH

DURATECH HEAT

BOG080x35-Ø8 TFR

EAN 4031582392944

BETTER MOBILITY. BETTER LIFE.

Product Drawings

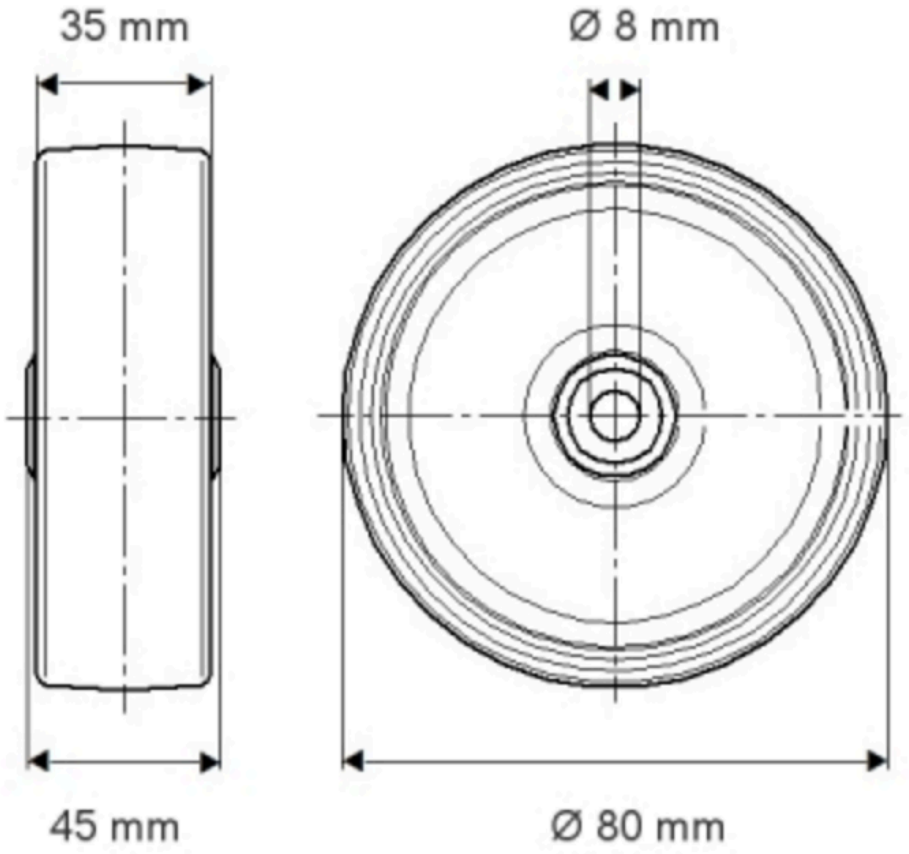

© Copyright 2026 TENTE International GmbH