PRODUCT INFORMATION

ALPHA

3477UOO080P62

EAN 4031582050172



Image may differ from the original product

PERFORMANCE

Roll Performance	●●●○○
Movement noise	●●●○○
Attrition	●●●●○
Corrosion resistance	●●●○○

CORE ATTRIBUTES

Product name	Alpha
Type	Swivel caster with total lock
Standard	EN12532 - Transport Equipment
Load capacity at 2.5 mph	440.92 lb
Electric conductive	no
Stainless	no
Load capacity Static	881.85 lb
Temperature range (Minimum)	-13 °F
Temperature range (Maximum)	176 °F
Overall height	4.25 in
Overall width	2.95 in
Overall weight	1.72 lb

HOUSING

Housing Material	Steel sheet, heavy
Fork shape	Broad
Swivel bearing	Two ball races
Housing Color	Blue passivated
Offset	1.75 in
Swivel radius	4.76 in
Swivel interference	9.53 in
Dome diameter	2.95 in

WHEEL

Body material	Polyamide
Tread material	Identical with wheel body
Bearing	Plain bearing
Axle	Screwed with nut
Wheel color	Natural white
Threadguards	Without threadguard
Diameter	3.15 in
Tread width	1.34 in
Body width	1.34 in
Hardness of tread (D)	75 Shore D

FITTING

Fitting type	Rectangular plate
Plate length	4.13 in
Plate width	3.15 in
Plate hole length (Minimum)	3.03 in
Plate hole length (Maximum)	2.36 in
Plate hole width (Minimum)	3.03 in
Plate hole width (Maximum)	3.15 in
Plate hole diameter	0.35 in

© Copyright 2026 TENTE International GmbH

ALPHA

3477UOO080P62

EAN 4031582050172

Order number 00005658

Product Drawings

3477U00080P62-neu

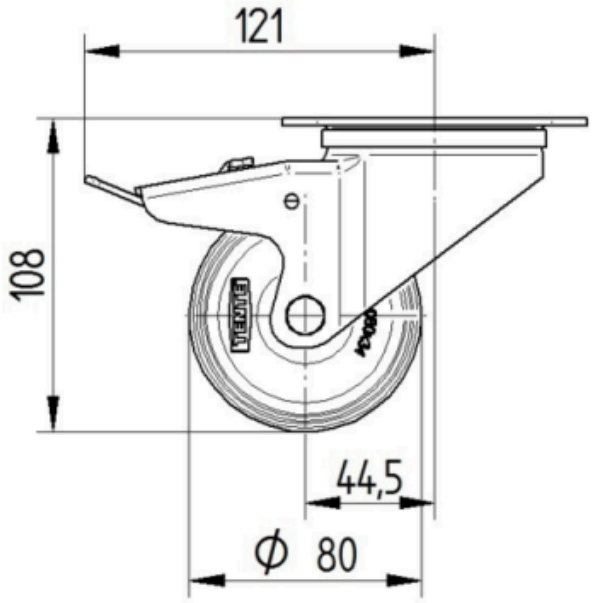

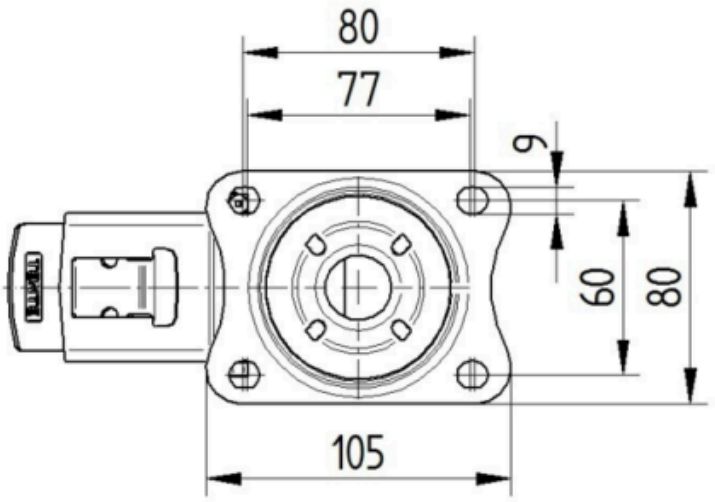

Platte 3470-080P62-105x80

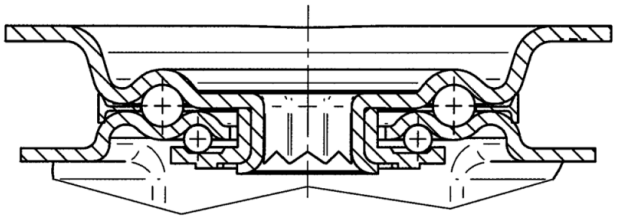

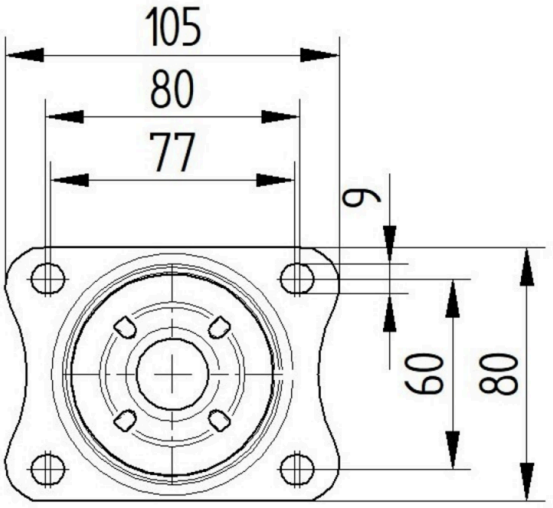

© Copyright 2026 TENTE International GmbH