PRODUCT INFORMATION

DURATECH

UOR200x50-Ø20 HL58

EAN 4031582442793

BETTER MOBILITY. BETTER LIFE.



Image may differ from the original product

WHEEL

Body material	Polyamide
Tread material	Identical with wheel body
Bearing	Roller bearing
Threadguards	Without threadguard
Diameter	7.87 in
Tread width	1.97 in
Axle hole diameter	0.79 in
Hub length	2.28 in
Hardness of tread (D)	75 Shore D

PERFORMANCE

Roll Performance	●●●○○
Movement noise	●●●○○
Attrition	●●●●●
Corrosion resistance	●●●○○

CORE ATTRIBUTES

Product name	Duratech
Type	Wheel
Standard	EN12532 - Transport Equipment
Load capacity at 2.5 mph	881.85 lb
Electric conductive	no
Stainless	no
Load capacity Static	1763.7 lb
Temperature range (Minimum)	-13 °F
Temperature range (Maximum)	176 °F
Overall weight	2.09 lb

© Copyright 2026 TENTE International GmbH

DURATECH

UOR200x50-Ø20 HL58

EAN 4031582442793

BETTER MOBILITY. BETTER LIFE.

Product Drawings

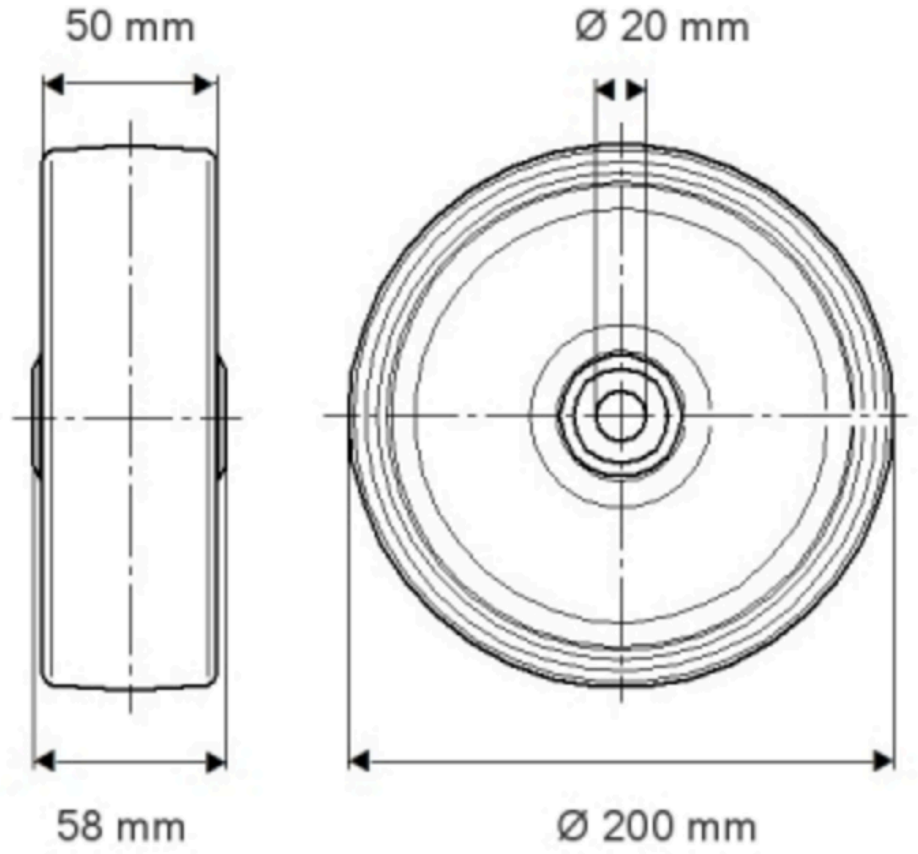

© Copyright 2026 TENTE International GmbH