FOOTMASTER

FOOT MASTER GATD-100-ASF-HUD

EAN 4031582495249
Order number 00800113

BETTER MOBILITY. BETTER LIFE.

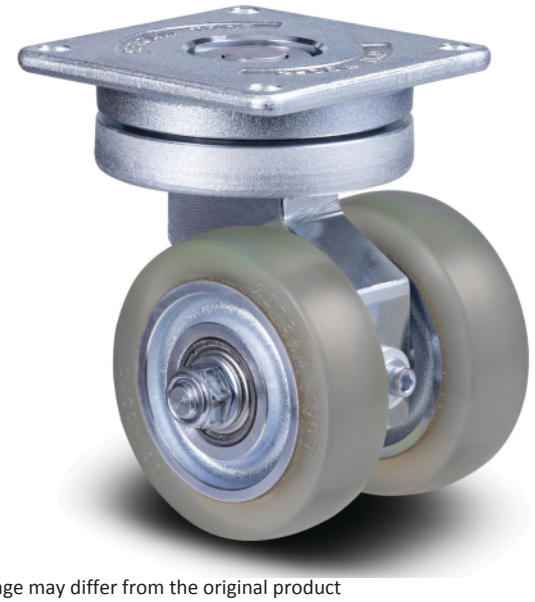

Image may differ from the original product

PERFORMANCE

Roll performance	○○○○○
Movement noise	○○○○○
Attrition	○○○○○
Corrosion resistance	○○○○○

CORE ATTRIBUTES

Product name	Footmaster
Type	Swivel castor
Load capacity at 3 km/h	310 kg
Temperature range (Minimum)	-10 °C
Temperature range (Maximum)	90 °C
Overall height	150 mm
Overall width	131 mm
Overall weight	7.01 kg

WHEEL

Bearing	Unmachined hub
Diameter	100 mm
Tread width	30 mm
Body width	30 mm

HOUSING

Offset	30 mm
Swivel radius	91 mm
Swivel interference	182 mm
Dome diameter	104 mm

FITTING

Plate length	112 mm
Plate width	112 mm
Plate hole length (Maximum)	92 mm
Plate hole width (Maximum)	92 mm
Plate hole diameter	9 mm

© Copyright 2026 TENTE International GmbH

FOOTMASTER

FOOT MASTER GATD-100-ASF-HUD

EAN 4031582495249
Order number 00800113

BETTER MOBILITY. BETTER LIFE.
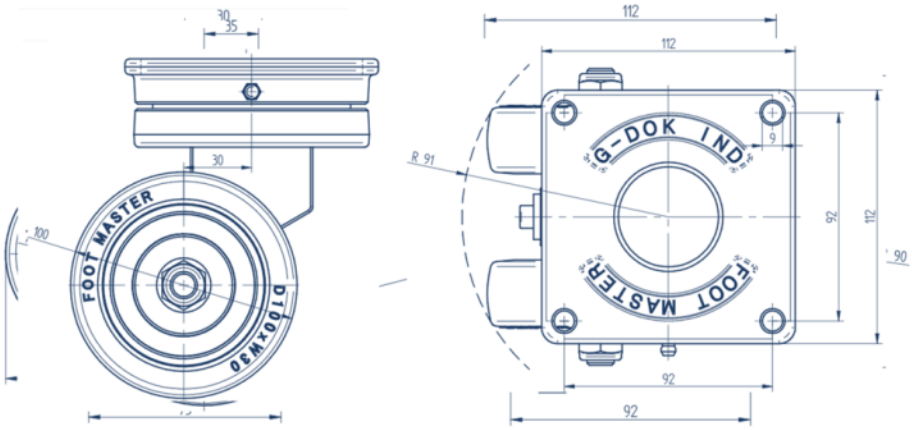
TECHNICAL DRAWINGS