PRODUCT INFORMATION

GALEA

5071PJP100P60-90x70

EAN 4031582367935

BETTER MOBILITY. BETTER LIFE.



Image may differ from the original product

PERFORMANCE

Roll Performance	●●●○○
Movement Noise	●●●○○
Attrition	●●●○○
Corrosion Resistance	●●●●○

CORE ATTRIBUTES

Product Name	Galea
Type	Swivel castor with directional lock
Standard	EN12530 - Devices Castors
Load capacity at 3 km/h	100 kg
Electric Conductive	No
Stainless	No
Load capacity Static	200 kg
Temperature range (Minimum)	-20 °C
Temperature range (Maximum)	60 °C
Overall Height	138 mm
Overall weight	0.49 kg

HOUSING

Housing Material	Polyamide
Fork shape	Closed
Swivel Bearing	Two ball races
Offset	40 mm
Swivel interference	205 mm

WHEEL

Body material	Polypropylene
Tread Material Mix	Thermoplastic rubber
Bearing	Precision ball bearing
Threadguards	With threadguard
Diameter	100 mm
Tread width	30 mm
Hardness of tread (A)	87 Shore A

FITTING

Fitting type	Rectangular plate
Plate length	90 mm
Plate width	70 mm
Plate hole length (Minimum)	60 mm
Plate hole length (Maximum)	70 mm
Plate hole width (Minimum)	50 mm
Plate hole width (Maximum)	55 mm
Plate hole diameter	8 mm

© Copyright 2026 TENTE International GmbH

GALEA

5071PJP100P60-90x70

EAN 4031582367935

BETTER MOBILITY. BETTER LIFE.

Product Drawings

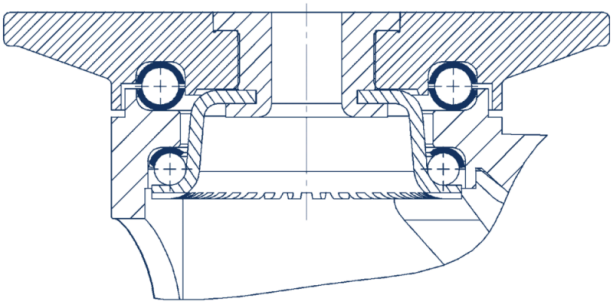

© Copyright 2026 TENTE International GmbH