PRODUCT INFORMATION

# ZETA

## 4687IEP200P63

EAN 4031582308136

BETTER MOBILITY. BETTER LIFE.



Image may differ from the original product

### PERFORMANCE

| | |
|---|---|
| Roll Performance | ●●●●○ |
| Movement Noise | ●●●●● |
| Attrition | ●●●○○ |
| Corrosion Resistance | ●●●○○ |

### CORE ATTRIBUTES

| | |
|---|---|
| Product Name | Zeta |
| Type | Swivel castor with total lock |
| Standard | EN12532 - Transport Equipment |
| Load capacity at 4 km/h | 450 kg |
| Load capacity at 6 km/h | 360 kg |
| Electric Conductive | No |
| Stainless | No |
| Load capacity Static | 900 kg |
| Temperature range (Minimum) | -20 °C |
| Temperature range (Maximum) | 85 °C |
| Overall Height | 240 mm |
| Overall width | 96 mm |
| Overall weight | 4.06 kg |

### HOUSING

| | |
|---|---|
| Housing Material | Steel sheet, very heavy |
| Fork shape | Broad, reinforced |
| Swivel Bearing | Two ball races, reinforced or stainless |
| Housing Color | Blue passivated |
| Offset | 55 mm |
| Swivel radius | 161 mm |
| Swivel interference | 322 mm |
| Dome diameter | 96 mm |

### WHEEL

| | |
|---|---|
| Tread hardness | soft |
| Body material | Aluminium |
| Tread Material Mix | Elastic tire, black, vulcanized |
| Bearing | Precision ball bearing |
| Axle | Screwed with nut |
| Wheel Color | Jet black (similar RAL9005) |
| Threadguards | Without threadguard |
| Diameter | 200 mm |
| Tread width | 50 mm |
| Body width | 50 mm |
| Hardness of tread (A) | 67 Shore A |

### FITTING

| | |
|---|---|
| Fitting type | Medium rectangular plate |
| Plate length | 137 mm |
| Plate width | 105 mm |
| Plate hole length (Minimum) | 75 mm |
| Plate hole length (Maximum) | 80 mm |
| Plate hole width (Minimum) | 75 mm |
| Plate hole width (Maximum) | 105 mm |
| Plate hole diameter | 11 mm |

© Copyright 2026 TENTE International GmbH

# ZETA

4687IEP200P63

EAN 4031582308136

Order number 00804237

**Product Drawings**

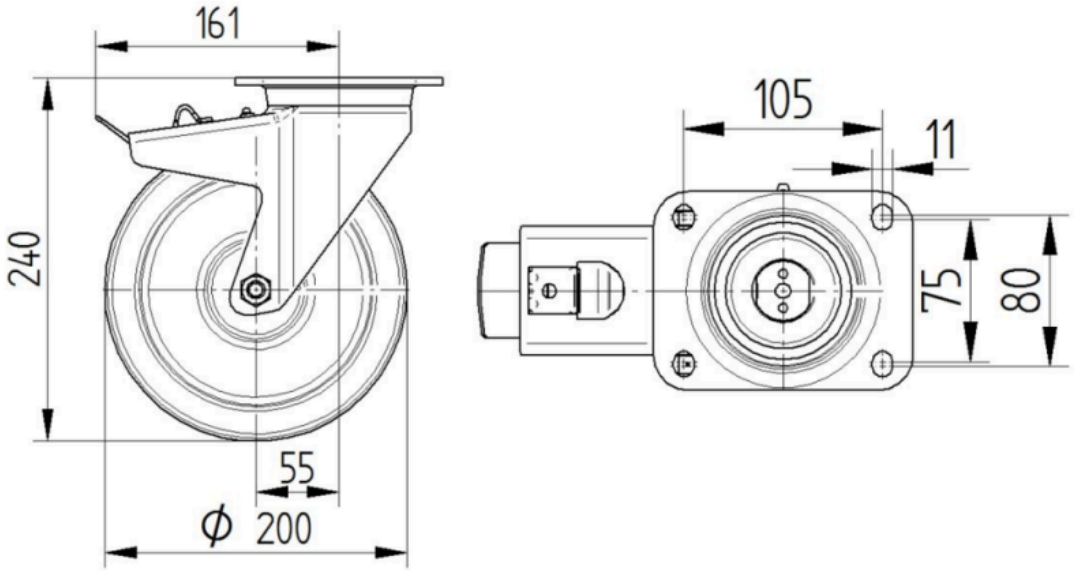


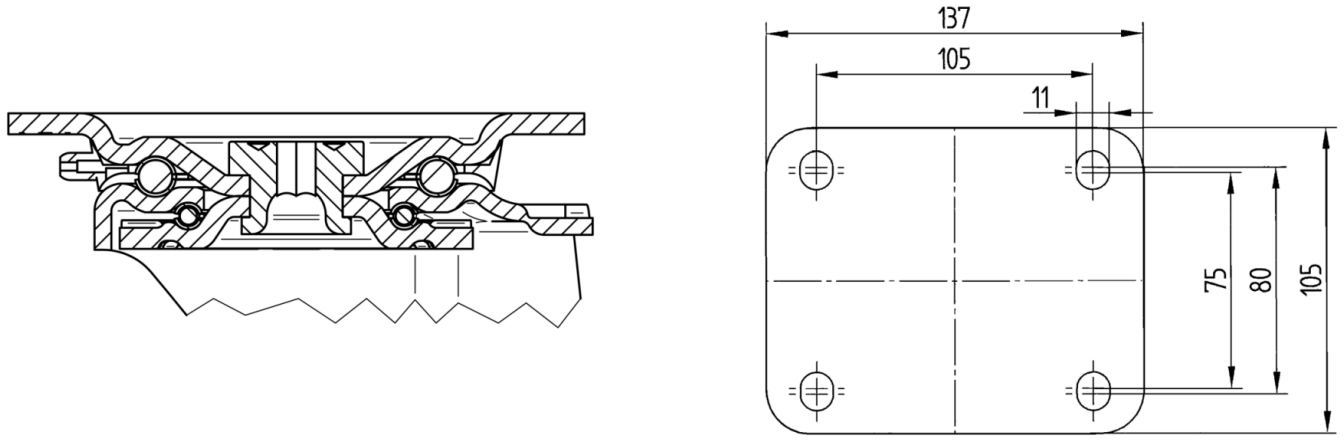


© Copyright 2026 TENTE International GmbH