PRODUCT INFORMATION

MAXTECH

UAR080x30-Ø12 HL44,4 BURDEOS

EAN 4031582372878

BETTER MOBILITY. BETTER LIFE.



Image may differ from the original product

WHEEL

Body material	Polyamide
Tread material	Polyurethane, injected
Bearing	Roller bearing
Threadguards	Without threadguard
Diameter	3.15 in
Tread width	1.18 in
Axle hole diameter	0.47 in
Hub length	1.75 in
Hardness of tread (D)	40 Shore D

PERFORMANCE

Roll Performance	●●●○○
Movement noise	●●●○○
Attrition	●●●●○
Corrosion resistance	●●●○○

CORE ATTRIBUTES

Product name	Maxtech
Type	Wheel
Standard	EN12532 - Transport Equipment
Load capacity at 2.5 mph	220.46 lb
Electric conductive	no
Stainless	no
Load capacity Static	440.92 lb
Temperature range (Minimum)	-40 °F
Temperature range (Maximum)	176 °F
Overall weight	0.37 lb

© Copyright 2026 TENTE International GmbH

MAXTECH

UAR080x30-Ø12 HL44,4 BURDEOS

EAN 4031582372878

BETTER MOBILITY. BETTER LIFE.

Product Drawings

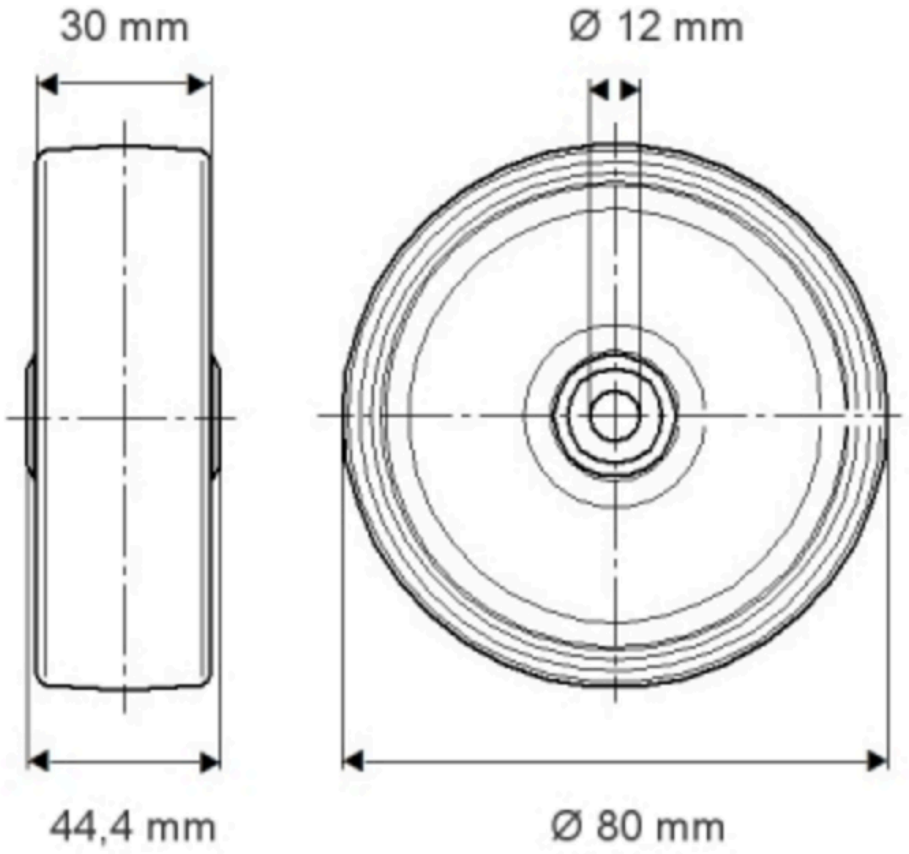

© Copyright 2026 TENTE International GmbH